higher education & training

Department:
Higher Education and Training
REPUBLIC OF SOUTH AFRICA

MARKING GUIDELINE

NATIONAL CERTIFICATE

MATHEMATICS N3

26 MARCH 2018

This marking guideline consists of 11 pages.

Copyright reserved

QUESTION 1

1.1 1.1.1

$$5x^4 - 5y^8$$
$$= 5(x^4 - y^8) \checkmark$$
$$= 5(x^2 - y^4)(x^2 + y^4) \checkmark$$
$$= 5(x - y^2)(x + y^2)(x^2 + y^4) \checkmark$$

(3)

1.1.2

$$15x^2y^2 - 25xy^3 - 10y^4$$
$$= 5y^2(3x^2 - 5xy - 2y^2) \checkmark$$
$$= 5y^2(3x + y)(x - 2y) \checkmark\checkmark$$

(3)

1.2 1.2.1

$$\frac{x^2 - y^2}{x^2 - 2xy + y^2}$$
$$= \frac{(x - y)(x + y)}{(x - y)(x - y)} \checkmark \checkmark$$
$$= \frac{x + y}{x - y} \checkmark$$

(3)

1.2.2

$$\frac{2}{a-b} \div \frac{4}{a^2 - b^2} \times \frac{5}{6a + 6b}$$
$$= \frac{2}{a-b} \times \frac{(a-b)(a+b)}{4} \times \frac{5}{6(a+b)} \checkmark \checkmark \checkmark$$
$$= \frac{10}{24}$$
$$= \frac{5}{12} \checkmark$$

(4)

1.3

$$x - 1 \overline{)\, 2x^3 - x^2 - 7x + 6}$$

$2x^2 + x - 6$ ✓

$2x^3 - 2x^2$

$x^2 - 7x$ ✓

$x^2 - x$

$-6x + 6$

$-6x + 6$ ✓

. .

Other factor : $2x^2 + x - 6$

$= (2x - 3)(x + 2)$

✓ ✓

(5)

[18]

QUESTION 2

2.1

$\sqrt{10-3x}-x=-2$

$\therefore \sqrt{10-3x}=x-2$

$\therefore 10-3x=x^2-4x+4$ ✓

$\therefore x^2-x-6=0$ ✓

$\therefore (x-3)(x+2)=0$

$\therefore x=3 \quad \text{or} \quad x=-2$ ✓

TEST: If $x=3$,then $\sqrt{10-9}-3=-2$

If $x=-2$, then $\sqrt{10+6}-(-2)=4+2=6$

$\therefore$ Only solution : $x=3$ ✓

Student should be penalised for not declaring that x=3 is the only solution. (4)

2.2

$2^{2x+2}-2^{2x-1}=56$

$\therefore 2^{2x}\left(2^2-2^{-1}\right)=56$ ✓

$\therefore 2^{2x}(4-\frac{1}{2})=56$

$\therefore 2^{2x}(\frac{7}{2})=56$ ✓

$\therefore 2^x=16$

$\therefore 2^{2x}=2^4$ ✓

$\therefore 2x=4$

$\therefore x=2$ ✓ (4)

2.3

$2\log_x 4+\log_x 54-\log_x \frac{1}{2}=3$

$\therefore \log_x 16+\log_x 54-\log_x \frac{1}{2}=3$ ✓

$\therefore \log_x \frac{16\times 54}{\frac{1}{2}}=3$ ✓

$\therefore \log_x\left(16\times 54\times 2\right)=3$ ✓

$\therefore x^3=16\times 54\times 2$ ✓

$\therefore x=12$ (4)

[12]

QUESTION 3

3.1

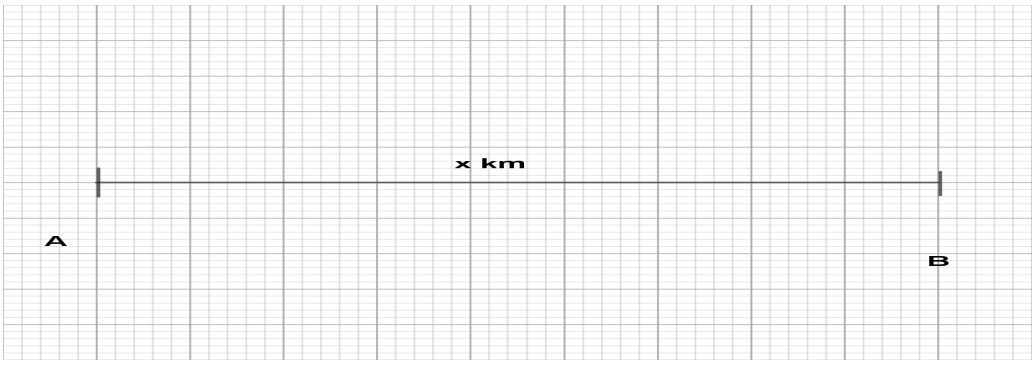

Distance from A to B: $t_1 = \frac{x}{8}$

Distance from B to A: $t_2 = \frac{x}{12}$

$\therefore$ Average speed $= \frac{\text{total distance}}{\text{total time}}$

$= \frac{2x}{\frac{x}{8}+\frac{x}{12}}$ ✓ ✓

$= \frac{2x}{\frac{3x+2x}{24}}$ ✓

$= \frac{2x}{1} \times \frac{24}{5x}$

$= \frac{48}{5}$ km/h ✓

$= 9,6$ km/h (4)

3.2 $B = \frac{A}{\sqrt{R^2+PQ}}$

$\therefore \sqrt{R^2+PQ} = \frac{A}{B}$ ✓

$\therefore R^2 + PQ = \frac{A^2}{B^2}$ ✓ ✓

$\therefore R^2 = \frac{A^2}{B^2} - PQ$ ✓

$\therefore R = \pm\sqrt{\frac{A^2}{B^2} - PQ}$ ✓

$= \pm \sqrt{\frac{A^2 - B^2PQ}{B^2}}$

$= \pm \frac{\sqrt{A^2 - B^2PQ}}{B}$ (4)

3.3 $x^2 = -6x + 5$

$\therefore x^2 + 6x = 5$

$\therefore x^2 + 6x + 9 = 5 + 9$ ✓

$\therefore (x+3)^2 = 14$

$\therefore x + 3 = \pm\sqrt{14}$

$\therefore x = -3 \pm \sqrt{14}$

$x = 3,742 - 3 = 0,742$ ✓

OR

$x = -3,742 - 3 = -6,742$ ✓ (4)

3.4 If $x = \frac{1}{2}$ or $x = \frac{2}{3}$ ✓

then $2x - 1 = 0$ or $3x - 2 = 0$ ✓

$\therefore \quad (2x-1)(3x-2) = 0$

$\therefore \quad 6x^2 - 7x + 2 = 0$ ✓ (3)

[15]

QUESTION 4

4.1 $M_{BD} = \tan 45^\circ = 1$ ✓

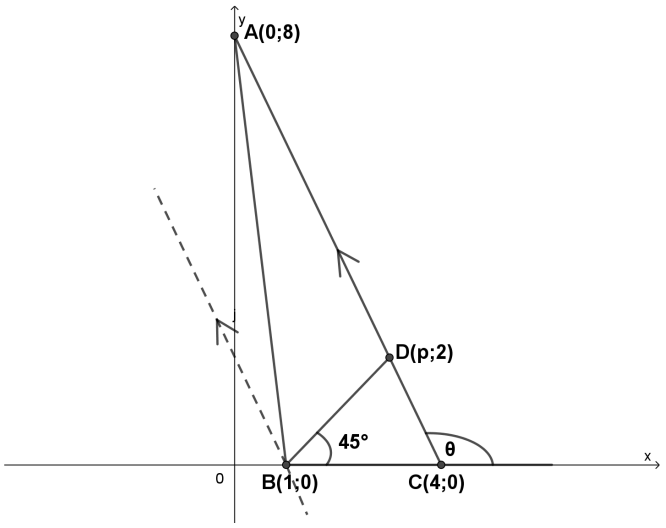

(1)

4.2 $m_{BD} = \frac{y_2 - y_1}{x_2 - x_1}$

$\therefore 1 = \frac{2-0}{p-1}$ ✓

$\therefore p - 1 = 2$

$\therefore p = 3$ ✓ (2)

4.3
$$AC = \sqrt{(x_2 - x_1)^2 + (y_2 - y_1)^2}$$
$$= \sqrt{(4-0)^2 + (0-8)^2} \quad ✓$$
$$= \sqrt{16+64}$$
$$= \sqrt{80}$$
$$= 4\sqrt{5} \quad ✓$$
(2)

4.4
$$m_{AC} = \frac{y_2 - y_1}{x_2 - x_1}$$
$$= \frac{0-8}{4-0} \quad ✓$$
$$= -2 \quad ✓$$
(2)

4.5
$$\theta = \tan^{-1} m$$
$$= \tan^{-1}(-2) \quad ✓$$
$$= -63,435^{\circ} \; ref$$
$$\theta = 116,565^{\circ} \quad ✓$$
(2)

4.6
$$m_{AC} = -2$$
$$y - y_1 = m(x - x_1)$$
$$y - 0 = -2(x-1) \quad ✓ \quad ✓$$
$$\therefore y = -2x + 2 \quad ✓$$
(3)

4.7
$$m_{BD} = 1$$
$$\therefore m_{BD} \times m = -1 \text{ (lines } \perp)$$
$$\therefore 1 \times m = -1$$
$$\therefore m = -1$$

$$y - y_1 = m(x - x_1)$$
$$\therefore y - 0 = -1(x-1) \quad ✓✓$$
$$\therefore y = -x + 1 \quad ✓$$

(3)
[15]

QUESTION 5

5.1 $\frac{x^2}{25}+\frac{y^2}{4}=1$

$x-\text{intercept}: x=\pm 5$

$y-\text{intercept}: y=\pm 2$

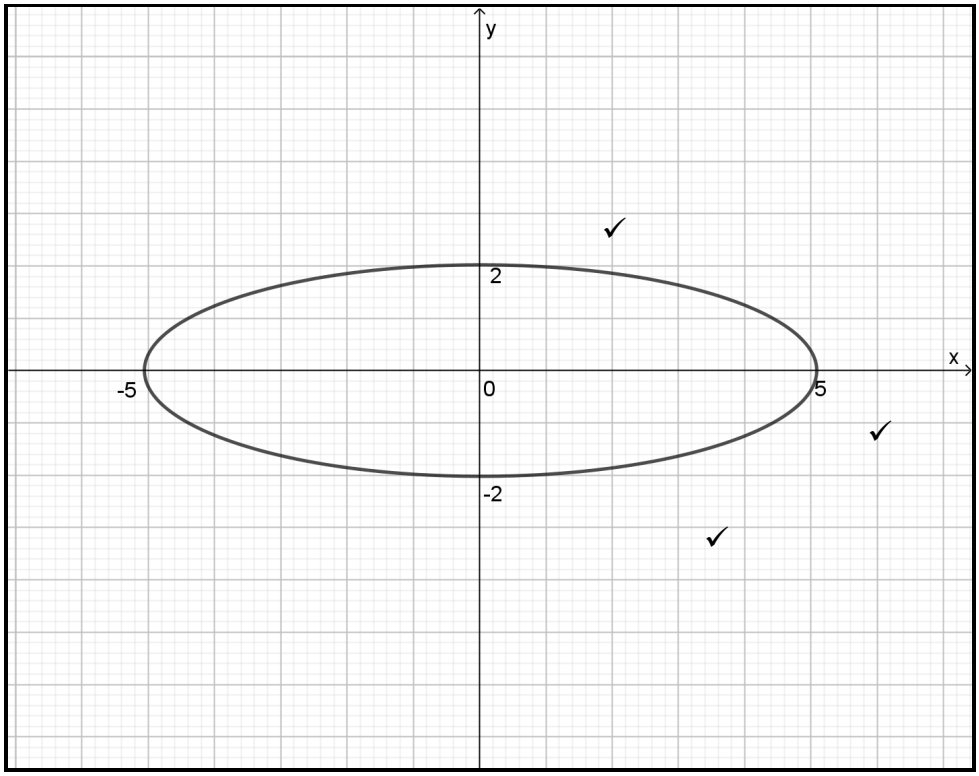

Mark allocation: 1 mark for x-intercepts at ± 5
1 mark for y-intercepts at ±2
1 mark for shape (3)

5.2 5.2.1 $f(x)=x^3-12x^2+36x$

$\frac{dy}{dx}=3x^2-24x+36$

For turningpoints: $f'(x)=0$

$\therefore 3x^2-24x+36=0$

$\therefore x^2-8x+12=0$

$\therefore (x-2)(x-6)=0$ ✓ ✓

$\therefore x=2$ or $x=6$

$\therefore f(2)=(2)^3-12(2)^2+36(2)$ $f(6)=(6)^3-12(6)^2+36(6)$

$=8-48+72$ $=216-432+216$

$=32$ $=0$

$\therefore$ Turningpoints are (6;0) and(2;32). ✓ ✓ (4)

5.2.2 x-intercepts : Let $y = 0$

$\therefore x(x^2 - 12x + 36) = 0$ ✓

$\therefore x(x-6)(x-6) = 0$ ✓

$\therefore x = 0$ or $x = 6$ or $x = 6$

$y-$intercept : Let $x = 0$

$\therefore y = 0$ ✓ (3)

5.2.3

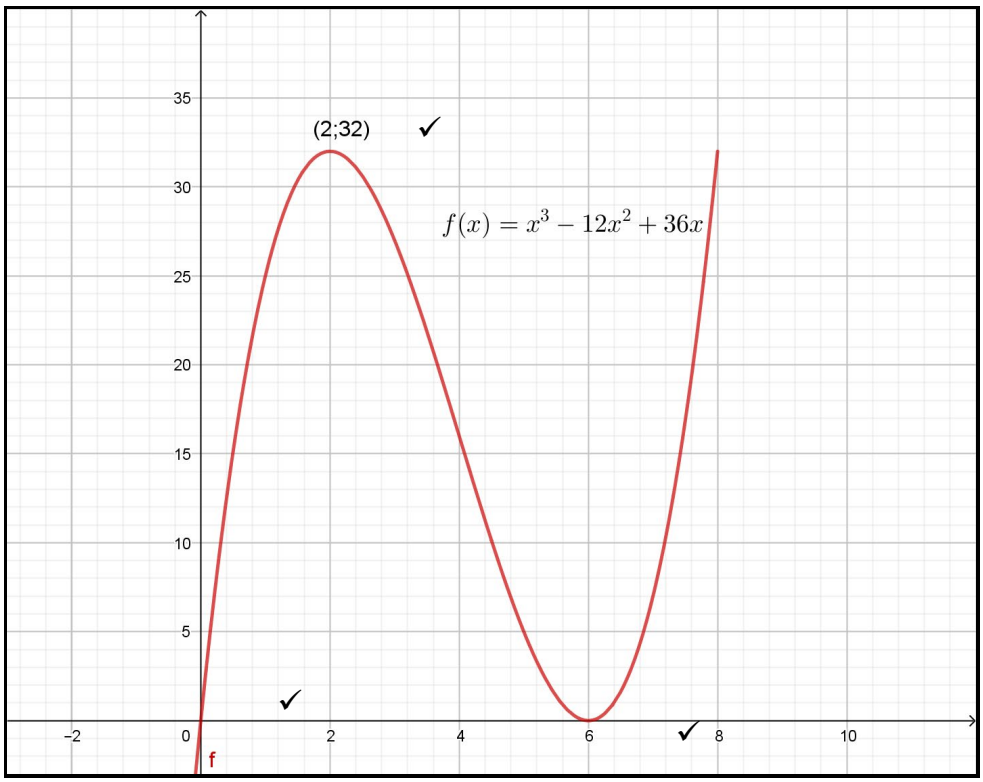

Mark allocation: 1 mark for y-intercept at (0;0)
1 mark for turning point (2;32)
1 mark for x-intercepts at (0;0), (6;0) and (6;0) (3)

5.3
$$f(x)=\frac{1}{x^3}-\frac{2}{3x^{-\frac{1}{2}}}$$
$$\therefore y=x^{-3}-\frac{2}{3}x^{\frac{1}{2}} \quad \checkmark \quad \checkmark$$
$$\frac{dy}{dx}=-3x^{-4}-\frac{1}{3}x^{-\frac{1}{2}} \quad \checkmark \quad \checkmark$$
$$=\frac{-3}{x^4}-\frac{1}{3x^{\frac{1}{2}}}$$
$$=-\frac{3}{x^4}-\frac{1}{3\sqrt{x}} \quad \checkmark \quad \checkmark$$
(6)
[19]

QUESTION 6

6.1
$$4\tan A-6=0$$
$$\tan A=\frac{6}{4} \quad \checkmark$$
$$\tan A=\frac{3}{2}$$
$$A=\tan^{-1}1{,}5 \quad \checkmark$$
$$A=56{,}310^0 \quad \checkmark$$
or
$$A=236{,}31^0 \quad \checkmark$$
(4)

6.2
$$\sin^2 B-\sin^2 B\cos^2 B$$
$$=\sin^2 B(1-\cos^2 B) \quad \checkmark$$
$$=\sin^2 B\sin^2 B \quad \checkmark$$
$$=\sin^4 B \quad \checkmark$$
(3)

6.3
$$LHS=\frac{\sin^2\beta}{1+\cos\beta}$$
$$=\frac{1-\cos^2\beta}{1+\cos\beta} \quad \checkmark$$
$$=\frac{(1-\cos\beta)(1+\cos\beta)}{1+\cos\beta} \quad \checkmark$$
$$=1-\cos\beta \quad \checkmark$$
$$=RHS$$
(3)

6.4

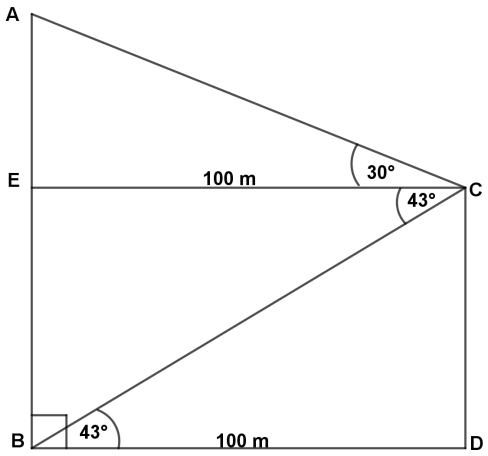

In ΔEBC:

$\frac{EB}{EC} = \tan 43^o$ ✓

$\therefore EB = 100 \tan 43^o$

$\therefore EB = 93,252m$ ✓

In ΔAEC:

$\frac{AE}{EC} = \tan 30^o$ ✓

$\therefore AE = 100 \tan 30^o$ ✓

$\therefore AE = 57,735m$

$\therefore AB = 93,252 + 57,735$

$\therefore AB = 150,987m$ ✓ ✓

(6)

6.5 $y = \sin x + 1$

x	0º	30º	60º	90º	120º	150º	180º	210º	240º	270º	300º	330º	360º
y	1	1,5	1,87	2	1,87	1,5	1	0,5	0,13	0	0,13	0,5	1

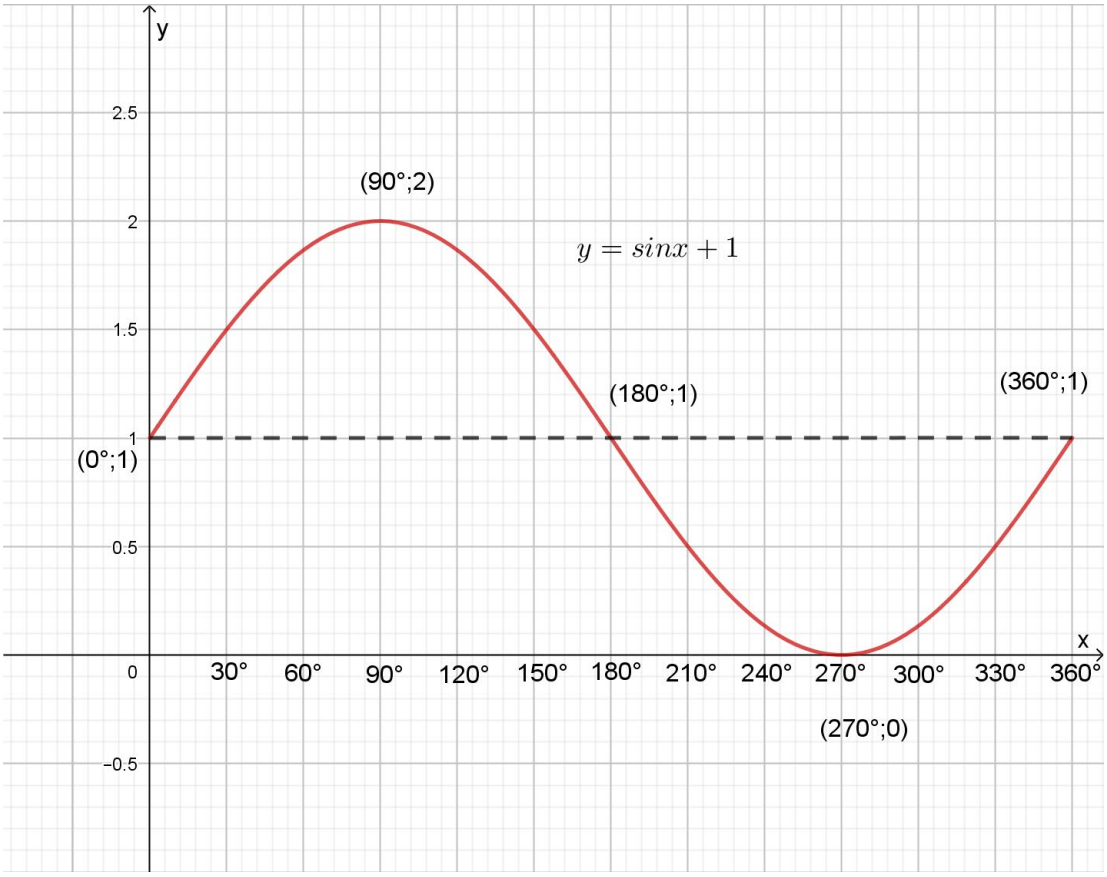

Mark allocation:
Turning points : (90º;2);(270º;0)- 2 marks
X and y-intercepts: (0º;1);(270º;0)-1 mark
Shape -1 mark
Ending point : (360º;1)-1 mark (5)
[21]

TOTAL: 100

Copyright reserved