higher education & training

Department:
Higher Education and Training
REPUBLIC OF SOUTH AFRICA

NATIONAL CERTIFICATE

MACHINES AND PROPERTIES OF METALS N4

(8190054)

11 August 2021 (X-paper)
09:00–12:00

Drawing instruments and nonprogrammable calculators may be used.

This question paper consists of 6 pages and a formula sheet of 2 pages.

255Q1G2111

Copyright reserved

DEPARTMENT OF HIGHER EDUCATION AND TRAINING
REPUBLIC OF SOUTH AFRICA

NATIONAL CERTIFICATE
MACHINES AND PROPERTIES OF METALS N4
TIME: 3 HOURS
MARKS: 100

INSTRUCTIONS AND INFORMATION

1. Answer all the questions.
2. Read all the questions carefully.
3. Number the answers according to the numbering system used in this question paper.
4. Start each question on a new page.
5. Use only a blue or black pen.
6. Write neatly and legibly.

Copyright reserved

QUESTION 1

1.1 Name TWO types of belt drives that may be used when noise must be eliminated in the work environment. (2)

1.2 With the aid of a simple sketch, explain why flat-rim pulleys are used, supported by an example. (3)

1.3 The following particulars are given for a cross belt drive between a motor and a machine:

Centre distance between pulleys	=	1,5 m
Diameter of motor pulley	=	450 mm
Diameter of machine pulley	=	200 mm
Rotational speed of motor pulley	=	225 r/min
Maximum tension in belt (T_1)	=	1,2 kN
Coefficient of friction	=	0,25
Contact angle on pulley	=	185°

Calculate the following:

1.3.1 The belt length needed for the drive, in metres. (3)

1.3.2 The power transmitted by the belt. (8)

[16]

QUESTION 2

2.1 Engineers design mechanical power transmission such as gear drives, belt drives and roller chain drives. To obtain the best solutions, they have to consider the economic factors.

List THREE of these economic factors. (3)

2.2 Explain how shaft alignment is done on roller chain drives. (3)

[6]

QUESTION 3

3.1 Explain how a simple spur gear is machined. (2)

3.2 Explain the following terms with regard to a gear tooth and write down the relevant equation:

3.2.1 Whole depth

3.2.2 Working depth

(2 × 2) (4)

[6]

Copyright reserved

QUESTION 4

4.1 Give FOUR reasons for the use of shaft couplings in industry. (4)

4.2 Name the type of fluid used in hydraulic couplings. (1)

4.3 Explain the operating features of a hydraulic coupling. (3)
[8]

QUESTION 5

5.1 Name any TWO typical applications of friction drives in industry. (2)

5.2 A wooden log with a mass of 610 kg rests on an incline of 20° to the horizontal. The coefficient of friction is 0,45. A tractor is used to tow the wooden log at a speed of 0,75 m/s.

Calculate the following:

5.2.1 (a) The force up the incline (4)

(b) The power the tractor uses (1)

5.2.2 (a) The force down the incline (4)

(b) The power the tractor uses (1)
[12]

QUESTION 6

6.1 Referring to the Occupational Health and Safety Act (No. 85 of 1993), explain regulations pertaining to transmission belts in a workplace or plant. (6)

6.2 Explain THREE regulations applicable to lighting. (3)

6.3 In terms of the Factories, Machinery and Building Work Act, describe the regulations pertaining to loose fitting outer clothing. (3)
[12]

QUESTION 7

7.1 Discuss the composition and manufacturing of the following TWO types of brake linings used in the braking system:

7.1.1 Organic (3)

7.1.2 Metallic (3)

Copyright reserved

7.2 The FIGURE below shows a full servo brake assembly. The components to the servo brake assembly are labelled from A to F. Write only the letters A to F with the corresponding label in your ANSWER BOOK.

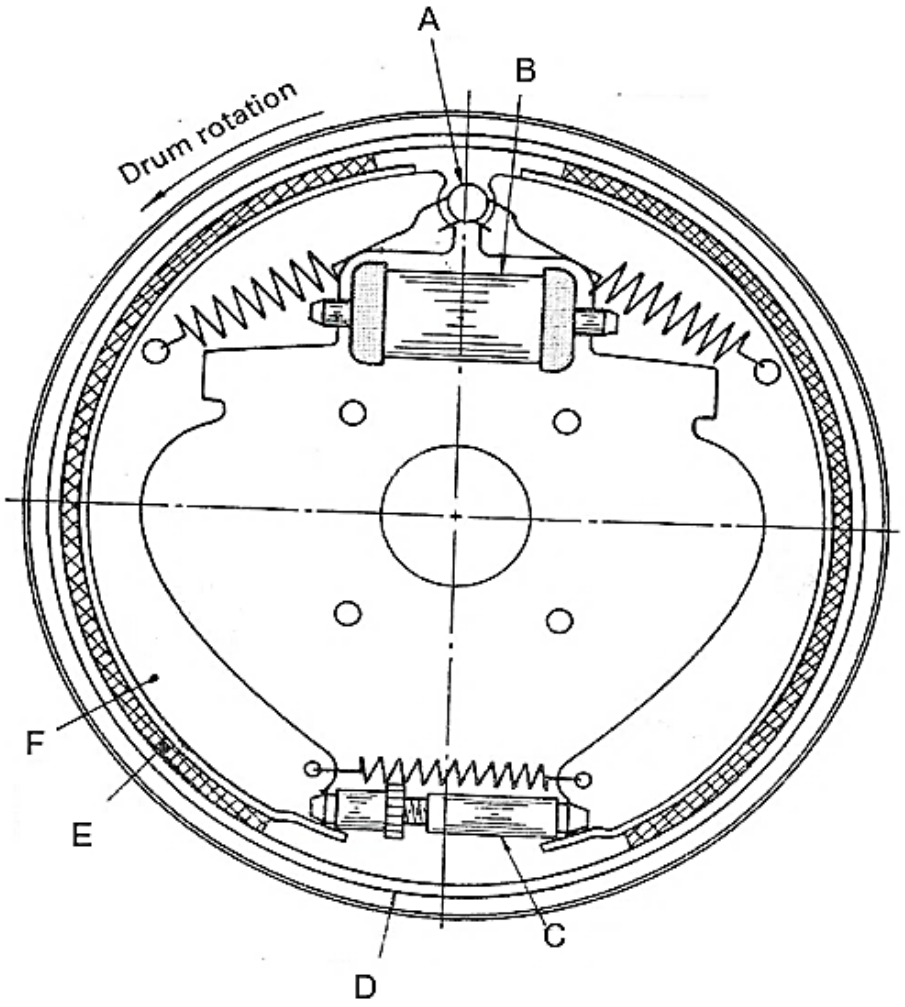

FIGURE (6)
[12]

QUESTION 8

8.1 List FIVE reasons for adding alloying elements to steels. (5)

8.2 Name THREE disadvantages of alloy steels. (3)
[8]

QUESTION 9

9.1 Give THREE reasons for the annealing process. (3)

9.2 Name FIVE precautions to be observed when hardening steels. (5)
[8]

QUESTION 10

10.1 Explain how pig iron is produced. (2)

10.2 The choice of the correct material for a particular job demands theoretical knowledge of the properties of each material to be used.

Explain the following properties:

10.2.1 Ductility

10.2.2 Hardness

(2 × 2) (4)
[6]

QUESTION 11

Draw and label a plain hydraulic press. **[6]**

TOTAL: 100

Copyright reserved

MACHINES AND PROPERTIES OF METALS N4

FORMULA SHEET

Any other applicable formulae may be used.

FRICTION FORMULAE

$W = mg$

FOR EQUILIBRUIM

Forces perpendicular to plane $\rightarrow$ $R = W$

Forces parallel to plane $\rightarrow F = F_{\mu}$

$F_{\mu} = \mu R$

$\mu_s = \frac{F_s}{R}$

$\mu_k = \frac{F_k}{R}$

$\text{Tan}\emptyset = \frac{F_{\mu}}{R}$

$\text{Coefficient of static friction } (\mu) = \frac{\text{friction force}}{\text{perpendicular force between surfaces}}$

$\text{Coefficient of kinetic friction } (\mu) = \frac{\text{friction force}}{\text{normal reaction force between surfaces}}$

$\text{Tan}\emptyset = \mu$

$F_{\mu} = \mu \times mg$

Movement downwards against an inclined plane (slope)

$F_{\mu} = \mu \times W\text{Cos}\theta$

$F = \mu \times W\text{Cos}\theta - W\text{Sin}\theta$

$F_{down} = F_{\mu} - W\text{Sin}\theta$

Movement upwards against an inclined plane (slope)

$F_{\mu} = \mu \times W\text{Cos}\theta$

$F = \mu \times W\text{Cos}\theta + W\text{Sin}\theta$

$F_{up} = F_{\mu} + W\text{Sin}\theta$

Power = force $\times$ velocity

BELT AND ROPE DRIVE FORMULAE

$V = \frac{\pi \times D \times N}{60}$

$V = \frac{\pi \times (D + t) \times N}{60}$

Effective tension $= (T_1 - T_2)$

$\text{Power} = (T_1 - T_2) \times \frac{\pi \times D \times N}{60}$

$1\text{Pa} = 1\text{N per m}^2$

Copyright reserved

Negleting centrifugal tension (T_c)

Flat belt

$$\frac{T_1}{T_2} = e^{\mu\theta}$$

Rope and V − belt

$$\frac{T_1}{T_2} = e^{\frac{\mu\theta}{Sin\frac{\emptyset}{2}}}$$

Considering centrifugal tension (T_c)

Flat belt

$$\frac{T_1 - T_c}{T_2 - T_c} = e^{\mu\theta}$$

Rope and V − belt

$$\frac{T_1 - T_c}{T_2 - T_c} = e^{\frac{\mu\theta}{\mathrm{Sin}\frac{\emptyset}{2}}}$$

$$T_c = \text{mass} \times V^2$$

$$\text{Mass} = \text{density}\left(\frac{\text{kg}}{\text{m}^2}\right) \times \frac{\text{volume}}{\text{m}}\left(\frac{m^3}{\text{m}}\right)$$

$$\text{Initial tension in belt} = \frac{T_1 + T_2}{2}$$

OPEN BELT

$$\text{Length} = \frac{\pi}{2}(D + d) + \frac{(D - d)^2}{4C} + 2C$$

Angle of lap (θ)

$$\mathrm{Cos}\ \frac{\emptyset}{2} = \frac{R - r}{C}$$

CROSSED BELT

$$\text{Length} = \frac{\pi}{2}(D + d) + \frac{(D + d)^2}{4C} + 2C$$

Angle of lap (θ)

$$\mathrm{Cos}\ \frac{\emptyset}{2} = \frac{R - r}{C}\ \emptyset = 360° - \emptyset$$

$$\text{Belt pull on bearing} = (T_1 - T_2)$$

$$\text{Safe stress} = \frac{T_1}{\text{width} \times \text{thickness}}$$

Copyright reserved