higher education & training

Department:
Higher Education and Training
REPUBLIC OF SOUTH AFRICA

MARKING GUIDELINE

NATIONAL CERTIFICATE

MACHINES AND PROPERTIES OF METALS N4

11 AUGUST 2021

This marking guideline consists of 9 pages.

Copyright reserved

QUESTION 1

1.1
- Flat belt drive
- Crossed belt drive

(2)

1.2 This type of pulley is used when it is required to move the belt from one pulley to another,✓ e.g. loose pulleys on lathe countershafts.✓

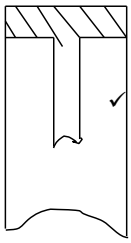

(3)

1.3 Given:

Centre distance between pulleys	=	1,5 m
Diameter of motor pulley	=	450 mm = 0,45 m
Diameter of machine pulley	=	200 mm = 0,2 m
Rotational speed of motor pulley	=	225 r/min
Maximum tension in belt (T_1)	=	1,2 kN
Coefficient of friction	=	0,25
Contact angle on pulley	=	185°

1.3.1 FIND LENGTH OF BELT

$$L=\frac{\pi}{2}(D+d)+\frac{(D+d)^2}{4C}+2C$$

$$L=\frac{\pi}{2}(0,45+0,2)+\frac{(0,45+0,2)^2}{4(1,5)}+2(1,5) \quad ✓$$

$$L=0,65+0,0704+3 \quad ✓$$

$$L=3,72\text{m} \quad ✓$$

(3)

Commented [L1]: I cannot type in the block. Please change to:
Find length of belt
Also, there should be a space before and after all mathematical operators and equal signs. Please apply throughout in the English and Afrikaans memos.

Copyright reserved

1.3.2 POWER TRANSMITTED BY BELT

$$P=(T_1 - T_2)\times\frac{\pi\times D\times N}{60}$$ ✓ ✓

BUT

$$\frac{T_1}{T_2}=e^{\mu\theta}$$ ✓

$$\frac{T_1}{T_2}=2,718^{0,25\times\frac{185}{57,3}}$$ ✓

$$\frac{T_1}{T_2}=2,2413$$

$$T_1=2,2413T_2$$ ✓

and $T_1=1200N$

$$T_2=\frac{1200N}{2,2413}$$

$$T_2=535,4N$$ ✓

$$\text{Power} = (T_1-T_2)\times\frac{\pi\times D\times N}{60}$$ ✓ ✓

$$=(1200N - 535,4N)\times\frac{\pi\times 0,45m\times 225r/min}{60}$$

$$=3523,34W$$

$$=3,52kW$$ ✓

(8)
[16]

QUESTION 2

2.1
- Original costs
- Maintenance costs
- Service life

(3)

2.2 Make sure that all shafts are parallel and level.✓ Check the alignment with a spirit level.✓ The shafts should be supported by sufficiently strong bearings to avoid any displacement during operation.✓

(3)
[6]

Commented [L2]: Change to:
Power transmitted by belt
But

Please add hard spaces:
1 200 N (x3)

Copyright reserved

QUESTION 3

3.1 It is cut straight and parallel to the axis. (2)

3.2 3.2.1
- Whole depth is the total depth of the tooth.
- Whole depth = addendum + dedendum

3.2.2
- Working depth is equal to twice the addendum.
- Working depth = (addendum + dedendum) – clearance

(2 × 2) (4)
[6]

QUESTION 4

4.1
- The difficulty of rolling shafts into long lengths
- The difficulty of keeping shafts straight
- The inconvenience of handling the weight of shafts
- The difficulty of transporting long lengths of shafts (4)

4.2 The fluid used is a mineral oil with low viscosity. (1)

4.3
- It operates at maximum efficiency when the speed of the driven member approaches that of the driving member.
- If the two members turn at the same speed, the oil will not pass from one to the other.
- The driving member should always turn a little faster than the driven member for engine power to be transmitted through the fluid coupling to the motorcar wheel.

(3)
[8]

QUESTION 5

5.1
- Friction clutches provide disengagement for shafts or pulleys while the machinery is in motion.
- Friction plays an important role in ensuring grip between the driving wheel and the surface, such as in a motor vehicle on the road surface.
- Friction drives are used in belt drives where friction between the belt and the pulley creates power that can be transmitted from one pulley to another.
- Friction drives are used in brakes where the friction between the brake drum and the brake shoe bring motion to the brake drum to a stop.

(Any 2 × 1) (2)

Copyright reserved

5.2 5.2.1 (a) Up the incline

Given:

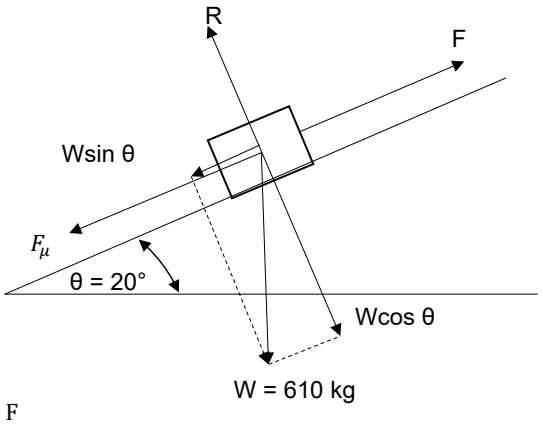

$F = W\sin\theta + F$

Where: $F = \mu R$ ✓

and $R = W\cos\theta$

$F = W\sin\theta + F$

$F = W\sin\theta + \mu R$

$F = W\sin\theta + \mu \times W\cos\theta$ ✓

$= 610 \times 9{,}81 \times \sin 20^0 + 0{,}45 \times 610 \times 9{,}81 \times \cos 20^0$ ✓

$= 2\,046{,}7 + 2\,530{,}4$

$= 4\,577{,}1$ N ✓ (4)

(b) $\text{Power} = \text{force} \times \text{velocity}$

$= 4\,577{,}1 \times 0{,}75$

$= 3\,432{,}8$ W ✓ (1)

5.2.2 (a) Down the incline

Given:

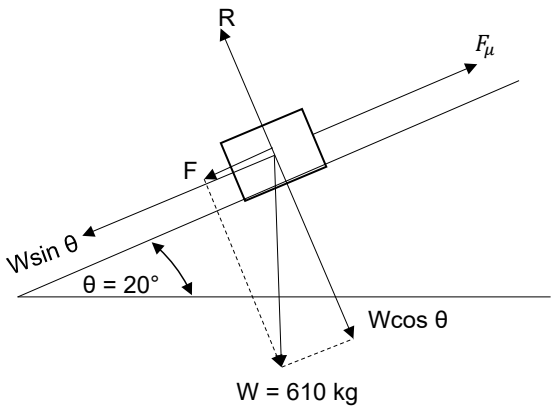

$F = W\sin\theta + F$

Where: $F = \mu R$

and $R = W\cos\theta$ ✓

$F = W\sin\theta + F$

$F = W\sin\theta + \mu R$

$F = \mu \times W\cos\theta - W\sin\theta$ ✓

$= 0{,}45 \times 610 \times 9{,}81 \times \cos 20^0 - 610 \times 9{,}81 \times \sin 20^0$ ✓

$= 2\,530{,}4 - 2\,046{,}7$

$= 483{,}1\ W$ ✓ (4)

(b) $\text{Power} = \text{force} \times \text{velocity}$

$= 483{,}1 \times 0{,}75$

$= 362{,}325\ W$ ✓ (1)

[12]

QUESTION 6

6.1 The user shall cause:
- All driving belts, ropes, chains or sprockets within normal reach to be guarded.
- The underside of every overhead driving belt,✓ rope or chain above passages or work places to be so guarded as to prevent a broken belt, rope or chain from falling.
- The guards or fences of belts, ropes and chain drives over or adjacent to passages or work places to be so constructed so as to resist the force of a broken belt, rope or chain. (3 × 2) (6)

6.2
- No employer shall allow anybody to work at night unless there is sufficient lighting (artificial) provided for such work to be carried out.
- Any doorways that are not provided with glass doors shall not be classified as avenues of natural light.
- The employer shall ensure that at all times any means of providing light such as windows, roof lights, etc. shall be kept clean and in good repair. (3)

6.3 No person working in close proximity to moving machinery shall wear✓ or be permitted to wear loosely fitting outer clothing,✓ jewellery, ornaments, watches or key chains or straps.✓ (3)
[12]

QUESTION 7

7.1 7.1.1 Organic lining consists of a grey-white compound of asbestos, filler materials and powdered resins that are thoroughly mixed, shaped and placed under heat and pressure until a hard, slate-like board is formed.✓ The material is cut, bent and attached to brake shoes.✓ This is known a moulding lining. Organic brake lining is used for ordinary brake services.✓ (3)

7.1.2 Metallic brake lining is composed of finely powdered iron or copper, graphite and friction modifiers.✓ After thorough mixing, a lubricating oil is added to prevent segregation of the different materials.✓ The mixture is then compressed into the desired form or shape.✓ (3)

7.2 A – Anchor pin
B – Wheel cylinder
C – Floating anchor pin
D – Brake drum
E – Brake lining
F – Brake shoe (6 × 1) (6)
[11]

Copyright reserved

QUESTION 8

8.1
- To obtain greater hardness
- To obtain greater toughness and strength
- To enable the steel to retain its size and shape during heat treatment
- To enable the steel to retain its hardness at high temperatures
- To produce a steel that is extremely hard and tough (5)

8.2
- They are much more expensive than plain carbon steels.
- They require special and very accurate heat treatment to bring out their most important and desirable properties.
- Very special and expensive heat treatment ovens and furnaces are used to carry out the heat treatment processes. (3)

[8]

QUESTION 9

9.1
- Carbon steel is softened by the annealing process in order to facilitate the machining processes.
- The process helps to relieve internal stresses that may have been caused during previous workings of the metal.
- It also refines the grain and reduces brittleness. (3)

9.2
- The steel must not be overheated.
- The steel must not be heated too quickly.
- The steel must not be oversoaked.
- The steel must be heated well through and not superficially.
- It should not be quenched at higher temperatures than those specified. (5)

[8]

QUESTION 10

10.1 Pig iron is the first stage in the production of all ferrous metals. It is obtained directly from iron ore by heating the ore in a blast furnace. The resulting castings are known as pigs and each has a mass of about 50 kg. Pig iron contains different amounts of carbon, silicon, manganese, sulphur and phosphorous. All these elements have an effect on the properties of the metal. (Any 2 × 1) (2)

10.2 10.2.1 This is the property that permits a metal to withstand considerable elongation under tension before rupture. An important point is that most materials possess greater ductility when cold. Consequently, all metals for wire and tube drawings are drawn cold. The property of ductility depends largely upon tenacity, and metals that are fairly soft and moderately tenacious are as a rule the most ductile. The material will therefore remain permanently bent or deformed.

Copyright reserved

10.2.2 Hardness is the property of resisting abrasion by scratching, cutting or rubbing. A rough estimate of hardness may be made by the use of a scribe or fine cut file.

(2 × 2) (4)
[6]

QUESTION 11

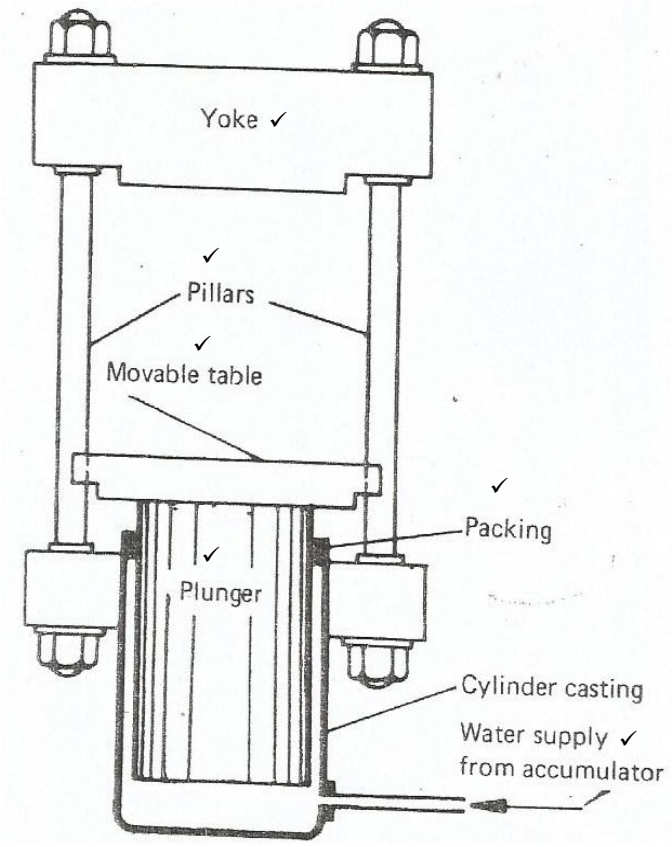

[6]

TOTAL: 100

Copyright reserved