higher education & training

Department:
Higher Education and Training
REPUBLIC OF SOUTH AFRICA

T980**(E)**(A8)T

NATIONAL CERTIFICATE

MACHINES AND PROPERTIES OF METALS N4

(8190054)

8 August 2019 (X-Paper)
09:00–12:00

Nonprogrammable calculators may be used.

This question paper consists of 6 pages and a formula sheet of 2 pages.

Copyright reserved

DEPARTMENT OF HIGHER EDUCATION AND TRAINING
REPUBLIC OF SOUTH AFRICA

NATIONAL CERTIFICATE
MACHINES AND PROPERTIES OF METALS N4
TIME: 3 HOURS
MARKS: 100

INSTRUCTIONS AND INFORMATION

1. Answer ALL the questions.
2. Read ALL the questions carefully.
3. Number the answers according to the numbering system used in this question paper.
4. ALL calculations must be correctly rounded off to THREE decimal places.
5. Write neatly and legibly.

NOTE:
1. The Safety Act is now referred to as the Occupational Health and Safety Act 85 of 1993.
2. The content is the same with regard to the syllabus. Only the number of the Act and the year changed.

Copyright reserved

QUESTION 1: POWER TRANSMISSION BELT DRIVES AND ROPE DRIVES

1.1 Name the THREE most common forms of belting material used in the industry. (3)

1.2 Explain the following belt joints:

1.2.1 Cemented and laced joints

1.2.2 Metallic fasteners

(2 × 2) (4)

1.3 The effective diameter of a driving pulley is 275 mm. It rotates at 1 000 r/min. The tension in the tight side of the belt is 440 N. The ratio of the tension is 4:1.

Calculate the power transmitted by the belt. (10)
[17]

QUESTION 2: ROLLER CHAIN DRIVES

2.1 Name FOUR methods of lubricating chain drives. (4)

2.2 Show, with the aid of a line sketch, the sag in a roller chain drive. (2)

2.3 Explain how the oil bath lubrication works. (3)
[9]

QUESTION 3: POWER TRANSMISSION GEAR DRIVES

3.1 State THREE advantages of the planetary system of gears. (3)

3.2 Name the parts of the spur-gear tooth indicated in FIGURE 1. Write only the answer next to the letter (A–D) in the ANSWER BOOK.

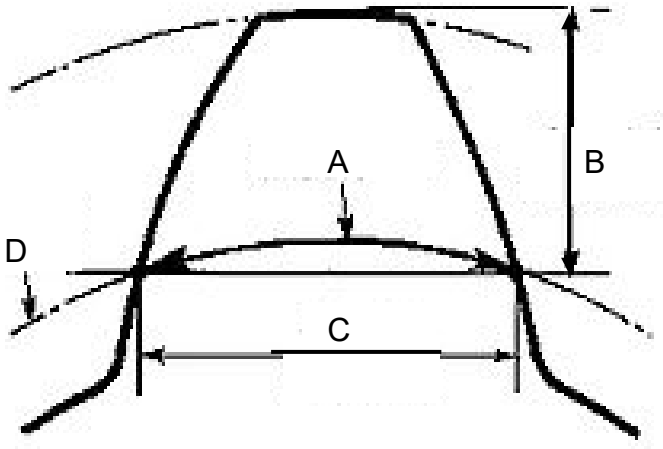

FIGURE 1

(4)
[7]

QUESTION 4: POWER TRANSMISSION COUPLINGS AND CLUTCHES

4.1 Explain the main reason for employing flexible couplings for connecting the shaft between the electric motor and the machine.

4.2 Explain the main difference between a *coupling* and a *clutch.* You can give your answer in table form.

(2 × 4) **[8]**

QUESTION 5: FRICTION

5.1 Calculate the horizontal force required to pull a fully loaded deep freezer with a total mass of 3 000 kg along a horizontal wooden floor, if the coefficient of friction between the freezer and the surface is 0,3. (6)

5.2 A machine weighing 800 N is dragged along a horizontal concrete floor with the aid of a rope which is inclined at 30° to the horizontal. The coefficient of friction between the floor and the machine is 0,25.

Determine the value of force P that is required to drag the object at a uniform speed along the floor.

SPACE DIAGRAM

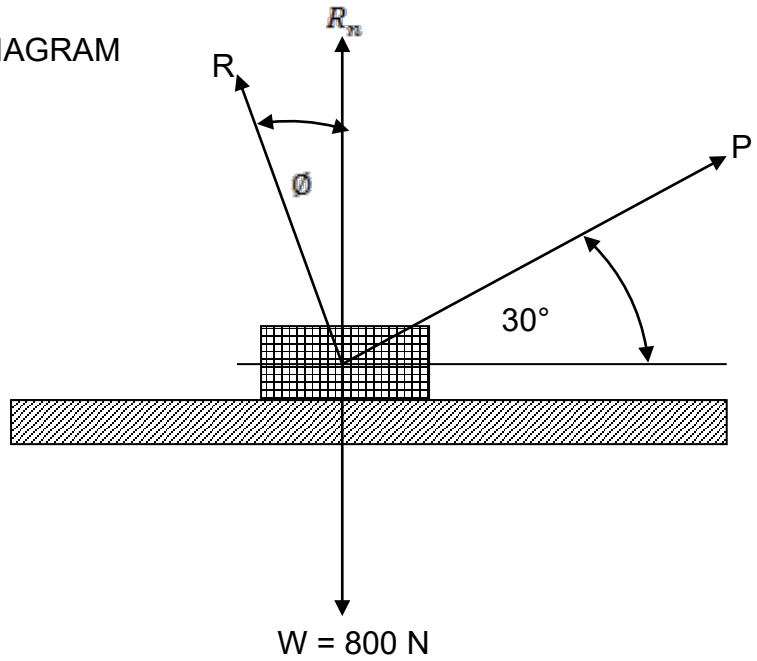

FIGURE 2

(6)
[12]

QUESTION 6: SAFETY PRECAUTIONS/DEVICES

6.1 Referring to the Occupational Health and Safety Act 85 of 1993, describe the regulations with regard to projecting shafts. (2)

6.2 Referring to the Occupational Health and Safety Act 85 of 1993, the user has to comply with certain requirements for the starting and stopping of machines.

Discuss the safety of the worker with reference to:

6.2.1 Electrically driven machines operated by more than one person

6.2.2 Persons intending to use a machine or set a machine in motion

6.2.3 Foot-operated pedals

(3 × 2) (6)
[8]

QUESTION 7: BRAKES

7.1 Name THREE different types of materials used for brake linings and state the type of bakes or material or circumstances where each type would be used.

7.2 Make a simple sketch of a band brake with ratchet wheels, explain its working operation and state where it is used in industry.

(2 × 6) **[12]**

QUESTION 8: ALLOY METALS

Duralumin is nonferrous aluminium.

Answer the following questions with regard to duralumin:

8.1 What materials does it contain? (3)

8.2 State the special properties of duralumin. (2)

8.3 Where is it mainly used? (2)
[7]

QUESTION 9: HEAT TREATMENT OF CARBON STEELS

9.1 State FIVE precautions to be observed when hardening steels. (5)

9.2 State TWO disadvantages of the cyanide method of case-hardening. (2)
[7]

Copyright reserved

QUESTION 10: ENGINEERING MATERIALS, MANUFACTURING PROCESSES

State the carbon content and the use of each of the following types of plain carbon steels:

10.1 Low-carbon steel

10.2 Medium-carbon steel

10.3 High-carbon steel

(3 × 2) **[6]**

QUESTION 11: FLUID DRIVES

11.1 Name the THREE main parts that a hydraulic torque converter consists of. (3)

11.2 All pumps are machines used for the transport of fluids.

State FOUR ways in which the movement of the fluids may be effected. (4)

[7]

TOTAL: 100

Copyright reserved

MACHINES AND PROPERTIES OF METALS N4

FORMULA SHEET

Any other applicable formula may also be used.

FRICTION

Formulae

$W = mg$

$$\text{Coefficent of static friction } (\mu) = \frac{\text{friction force}}{\text{Perpendicular force between surfaces}}$$

$$\text{Coefficent of kinetic friction } (\mu) = \frac{\text{friction force}}{\text{Normal reaction force between surfaces}}$$

$\text{Tan } \phi = \mu$

$F_{\mu} = \mu \times mg$

Movement downwards against an incline plane (Slope)

$F_{\mu} = \mu \times W\text{Cos}\theta$

$F = \mu \times W\text{Cos}\theta - W\text{sin}\theta$

$F_{down} = F_{\mu} - W\text{sin}\theta$

Movement upwards against an incline plane (Slope)

$F_{\mu} = \mu \times W\text{Cos}\theta$

$F = \mu \times W\text{Cos}\theta + W\text{sin}\theta$

$F_{up} = F_{\mu} + W\text{sin}\theta$

Copyright reserved

BELT AND ROPE DRIVES

Formulae

$$V=\frac{\pi\times D\times N}{60}$$

$$V=\frac{\pi\times(D+t)\times N}{60}$$

Effective tension$=(T_1-T_2)$

$$\text{Power} = (T_1-T_2)\times\frac{\pi\times D\times N}{60}$$

1 Pa = 1N per m^2

Neglecting Centrifugal tension (T_c)

Flat belt $\quad\frac{T_1}{T_2}=e^{\mu\theta}$

Rope and V-belt $\quad\frac{T_1}{T_2}=e^{\frac{\mu\theta}{\sin\frac{\phi}{2}}}$

Considering Centrifugal tension (T_c)

Flat belt $\quad\frac{T_1-T_c}{T_2-T_c}=e^{\mu\theta}$

Rope and V-belt $\quad\frac{T_1-T_c}{T_2-T_c}=e^{\frac{\mu\theta}{\sin\frac{\phi}{2}}}$

T_c = Mass $\times V^2$

Mass = Density$(kg/m^3)\times$Volume/m(m^3/m)

Initial tension in belt = $\frac{T_1+T_2}{2}$

OPEN BELT

$$\text{Lenght} = \frac{\pi}{2}(D+d)+\frac{(D-d)^2}{4c}+2c$$

Angle of lap(θ)

$$\cos\frac{\phi}{2}=\frac{R-r}{C}$$

CROSSED BELT

$$\text{Lenght} = \frac{\pi}{2}(D+d)+\frac{(D+d)^2}{4c}+2c$$

Angle of lap(θ)

$$\cos\frac{\phi}{2}=\frac{R-r}{C}\quad\text{and}\quad\phi=360°-\phi$$

Belt pull on bearing = (T_1+T_2)

$$\text{Safe stress} = \frac{T_1}{\text{Width}\times\text{thickness}}$$

Copyright reserved