higher education & training

Department:
Higher Education and Training
REPUBLIC OF SOUTH AFRICA

T980**(E)**(A2)T

NATIONAL CERTIFICATE

MACHINES AND PROPERTIES OF METALS N4

(8190054)

2 August 2018 (X-Paper)
09:00–12:00

Nonprogrammable calculators may be used.

This question paper consists of 7 pages and a formula sheet of 2 pages.

Copyright reserved

DEPARTMENT OF HIGHER EDUCATION AND TRAINING
REPUBLIC OF SOUTH AFRICA

NATIONAL CERTIFICATE
MACHINES AND PROPERTIES OF METALS N4
TIME: 3 HOURS
MARKS: 100

INSTRUCTIONS AND INFORMATION

1. Answer ALL the questions.
2. Read ALL the questions carefully.
3. Number the answers according to the numbering system used in this question paper.
4. ALL calculations must be correctly rounded off to THREE decimal places.
5. Write neatly and legibly.

Copyright reserved

QUESTION 1: POWER TRANSMISSION GEAR DRIVES

1.1 Explain what is meant by mitre gears and give ONE example of where they can be used. (2)

1.2 Name THREE different types of gears which are generally used in industry. (3)

1.3 Draw and label a neat spur gear tooth profile. (5)
[10]

QUESTION 2: POWER TRANSMISSIOM: BELT DRIVES AND ROPE DIVES

2.1 The sketch below shows a sectional front view of a V-belt. Write down the answer next to the letters A–E in the ANSWER BOOK.

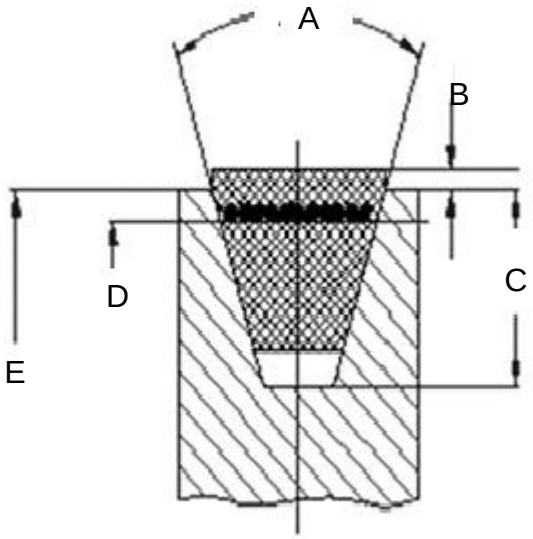

(5)

2.2 The following information applies to a flat-belt drive

Effective diameter of motor pulley	= 600 mm
Speed of the motor pulley	= 700 r/min
Coefficient of friction	= 0,32
Contact angle of the belt	= 176°
Mass of the belt	= 0,975 kg per metre length
Maximum allowable tension per belt	= 800 N
Efficiency of the drive	= 81%
Power transmitted	= 28 kW

Determine the following:

2.2.1 The belt speed (2)

2.2.2 The centrifugal force (2)

2.2.3 The input power (2)

Copyright reserved

2.2.4 The tension in the tight and slack sides of the belt (4)

2.2.5 The number of flat-belts (2)

[17]

QUESTION 3: POWER TRANSMISSION ROLLER CHAIN DRIVES

The diagram below shows a sectional front view and the top view of a roller chain link. Write down the answer next to the letter to A–G in the ANSWER BOOK.

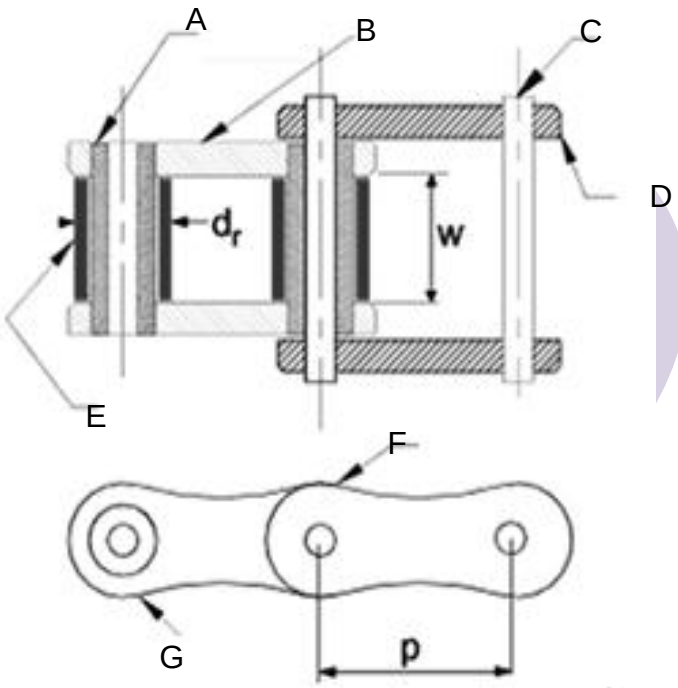

[7]

QUESTION 4: FRICTION

4.1 A mass with a weight of 600 N rests on a plane as shown in FIGURE 1 below.

Calculate the smallest force, F, needed to pull the mass up the incline of 15° if the coefficient of friction is 0,2.

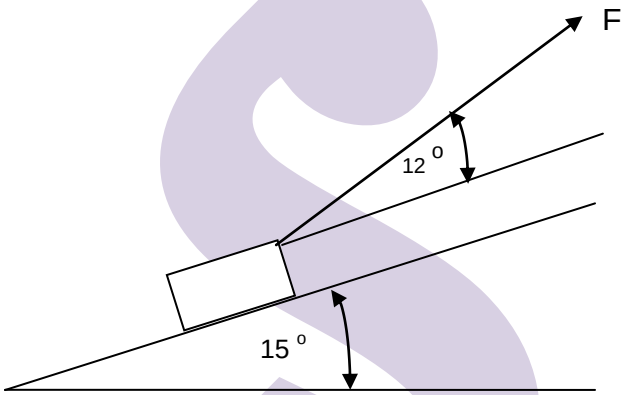

(7)

4.2 Name THREE applications where friction in industry is a disadvantage. (3)
[10]

QUESTION 5: BRAKES

5.1 Briefly describe the function of the following valves with regard to a compressed-air brake system.

5.1.1 Drain valve

5.1.2 Quick-release valve

(2 × 2) (4)

5.2 Name the TWO most general types of disc brakes. (2)

5.3 State ONE advantage and ONE disadvantage of disc brakes. (2)
[8]

QUESTION 6: FLUID DRIVES

6.1 Briefly describe what you understand by Pascal's law. (2)

6.2 Tabulate FIVE advantages of centrifugal pumps over reciprocating pumps. (5)

6.3 Briefly explain why an accumulator is used in a hydraulic press. (2)
[9]

Copyright reserved

QUESTION 7: SAFETY PRECAUTIONS AND SAFETY DEVICES

7.1 With reference to the Occupational Health and Safety Act, 1993 (Act 85 of 1993), describe the following:

7.1.1 Condition of floors as described by Regulation C12.

7.1.2 Wearing of loose outer clothing as described by Regulation C19.

7.1.3 Provision that the employer should make regarding machine tools as described by Regulation C36.

(3 × 2) (6)

7.2 In terms of the Occupational Health and Safety Act, 1993 (Act 85 of 1993), the employer shall ensure cleanliness in the factory.

Briefly describe what is determined by Regulation B5 regarding cleanliness. (6)
[12]

QUESTION 8: COUPLINGS AND CLUTCHES

8.2 Make a neat sectional freehand drawing of a solid flange coupling mounted on a shaft. (6)

8.2 Explain the functions of a flexible coupling. (3)
[9]

QUESTION 9: HEAT TREATMENT OF CARBON STEELS

9.1 Briefly explain the following terms with reference to properties of metals:

9.1.1 Tenacity

9.1.2 Hardness

(2 × 1) (2)

9.2 Name FOUR properties of high carbon steel. (4)

9.3 Name TWO instruments used to measure the temperature in a furnace. (2)
(8)

QUESTION 10: ENGINEERING MATERIAL MANUFACTURING PROCESS

10.1 What is the purpose of hardening as a heat treatment process? (2)

10.2 Explain the purpose of quenching as a heat treatment process? (3)
[5]

Copyright reserved

QUESTION 11: ALLOY METALS

White metal is commonly used for bearing liners.

11.1 Name the THREE elements used to produce this alloy. (3)

11.2 Name TWO characteristics of white metal. (2)
[5]

TOTAL: 100

Copyright reserved

MACHINES AND PROPERTIES OF METALS N4

FORMULA SHEET

Any other applicable formula may be used.

FRICTION

Formula

$W = mg$

Coefficent of static friction $(\mu) = \dfrac{\text{friction force}}{\text{Perpendicular force between surfaces}}$

Coefficent of kinetic friction $(\mu) = \dfrac{\text{friction force}}{\text{Normal reaction force between surfaces}}$

$\text{Tan } \phi = \mu$

$F_{\mu} = \mu \times mg$

Movement downwards against an incline plane (Slope)

$F_{\mu} = \mu \times W\text{Cos}\theta$

$F = \mu \times W\text{Cos}\theta - W\text{sin}\theta$

$F_{down} = F_{\mu} - W\text{sin}\theta$

Movement upwards against an incline plane (Slope)

$F_{\mu} = \mu \times W\text{Cos}\theta$

$F = \mu \times W\text{Cos}\theta + W\text{sin}\theta$

$F_{up} = F_{\mu} + W\text{sin}\theta$

Copyright reserved

BELT AND ROPE DRIVES

Formula

$V=\frac{\pi\times D\times N}{60}$

$V=\frac{\pi\times(D+t)\times N}{60}$

Effective tension$=(T_1-T_2)$

Power $=(T_1-T_2)\times\frac{\pi\times D\times N}{60}$

1 Pa = 1N per m^2

Neglecting Centrifugal tension (T_c)

Flat belt $\frac{T_1}{T_2}=e^{\mu\theta}$

Rope and V-belt $\frac{T_1}{T_2}=e^{\frac{\mu\theta}{\sin\frac{\phi}{2}}}$

Considering Centrifugal tension (T_c)

Flat belt $\frac{T_1-T_c}{T_2-T_c}=e^{\mu\theta}$

Rope and V-belt $\frac{T_1-T_c}{T_2-T_c}=e^{\frac{\mu\theta}{\sin\frac{\phi}{2}}}$

T_c = Mass × V^2

Mass = Density$(kg/m^3)\times$Volume/m(m^3/m)

Initial tension in belt = $\frac{T_1+T_2}{2}$

OPEN BELT

Lenght = $\frac{\pi}{2}(D+d)+\frac{(D-d)^2}{4c}+2c$

Angle of lap(θ)

$\cos\frac{\phi}{2}=\frac{R-r}{C}$

CROSSED BELT

Lenght = $\frac{\pi}{2}(D+d)+\frac{(D+d)^2}{4c}+2c$

Angle of lap(θ)

$\cos\frac{\phi}{2}=\frac{R-r}{C}$ and $\phi=360°-\phi$

Belt pull on bearing = (T_1+T_2)

Safe stress = $\frac{T_1}{\text{Width}\times\text{thickness}}$

Copyright reserved