higher education & training

Department:
Higher Education and Training
REPUBLIC OF SOUTH AFRICA

MARKING GUIDELINE

NATIONAL CERTIFICATE

MACHINES AND PROPERTIES OF METALS N4

2 AUGUST 2018

This marking guideline consists of 8 pages.

Copyright reserved

QUESTION 1: POWER TRANSMISSION GEAR DRIVES

1.1 When two bevel gears are of the same size and dimensions and their axes intersect at right angles, they are referred to as mitre gears. (2)

1.2
- Spur gears
- Helical gears (single and double)
- Worm and worm-wheel
- Bevel gears
- Rack and pinion
- Internal gears
- Hypoid gears
- Epicyclic gears (Any 3 × 1) (3)

1.3

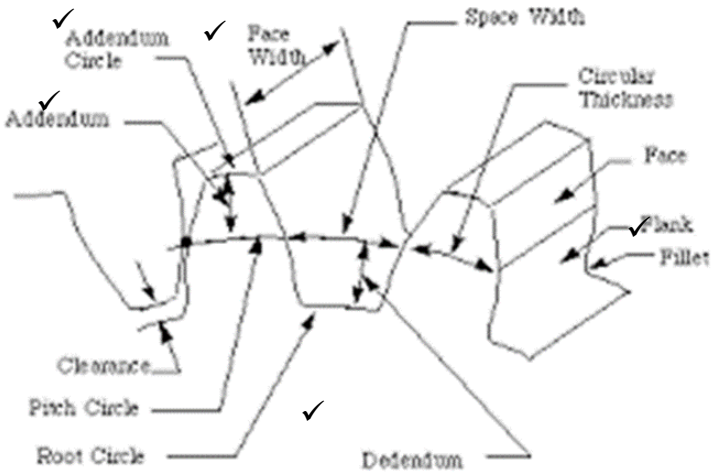

(5)
[10]

QUESTION 2: POWER TRANSMISSIOM: BELT DRIVES AND ROPE DIVES

2.1
A Groove angle
B Belt ride-out
C Groove depth
D Pitch diameter
E Sheave outside diameter

(5 × 1) (5)

2.2 2.2.1

$$V = \frac{\pi DN}{60}$$
$$= \frac{\pi \text{ x } 0{,}600 \times 700}{60} \checkmark$$
$$= 21{,}991\,\text{m/s} \checkmark$$

(2)

2.2.2

$$T_C = mv^2$$
$$= 0{,}975 \times 21{,}991^2 \checkmark$$
$$= 471{,}514\text{N} \checkmark$$

(2)

2.2.3

$$P_{in} = \frac{P_O}{\eta}$$
$$= \frac{28\,000}{0,81} \checkmark$$
$$= 34\,567,9 \text{ W}$$
$$= 34,568\text{kW} \checkmark$$

(2)

2.2.4

$$P = (T_1 - T_2)v$$
$$T_1 - T_2 = \frac{P}{v}$$
$$= \frac{34\,568}{21,991}$$
$$= 1\,571,92 \text{ N}$$
$$T_1 = 1\,571,92 + T_2 \checkmark \text{.....(1)}$$

$$\frac{T_1 - T_C}{T_2 - T_C} = e^{\frac{176 \times 0,32}{57,3 \times 1}} \checkmark$$
$$\frac{T_1 - 471,514}{T_2 - 471,514} = 2,672$$
$$T_1 - 471,514 = 2,672\,(T_2 - 471,514) \checkmark$$
$$T_1 - 471,514 = 2,672\,T_2 - 1259,885 \text{ .....(2)}$$

Substituting (1) into (2) yields
$$1571,92 + T_2 - 471,54 = 2,672\,T_2 - 1\,259,885 \checkmark$$
$$2,672T_2 - T_2 = 1\,571,92 + 1259,885 - 471,54$$
$$1,672T_2 = 2360,265$$
$$T_2 = \frac{2360,265}{1,672}$$
$$= 1411,642 \text{ N} \checkmark$$
$$T_1 = 1571,92 + T_2$$
$$= 1571,92 + 1411,642$$
$$= 2983,562 \checkmark$$

(4)

2.2.5

$$n = \frac{T_1}{\text{Force}_{\text{maxi}}} \checkmark$$
$$= \frac{2983,562}{800}$$
$$= 3,7 \checkmark$$
$$\cong 4 \text{ belts}$$

(2)
[17]

QUESTION 3: POWER TRANSMISSION ROLLER CHAIN DRIVES

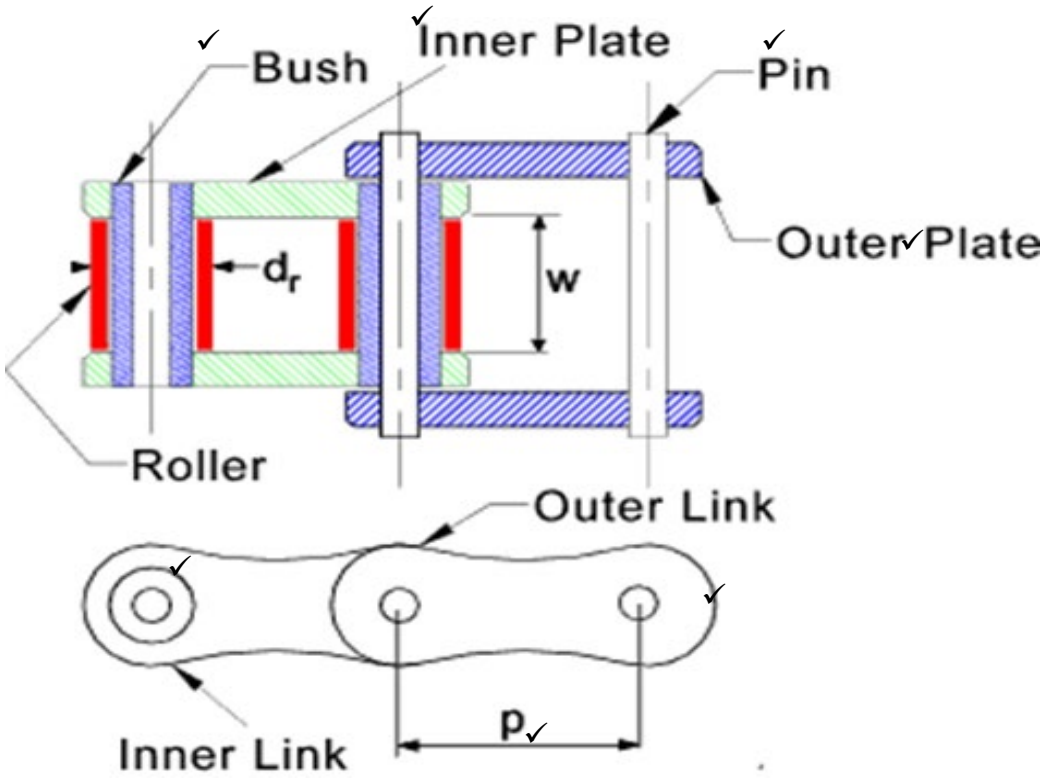

(7 × 1) **[7]**

QUESTION 4: FRICTION

4.1

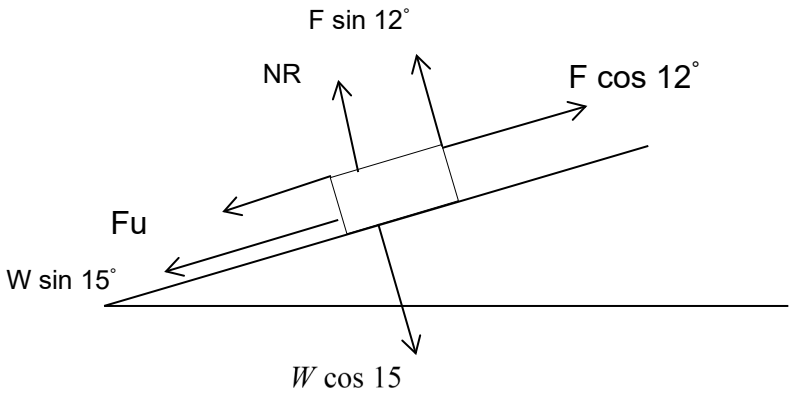

$\Sigma F_{UP} = \Sigma F_{DOWN}$

$NR + F\sin 12 = W\cos 15$

$NR + F\sin 12 = 600\cos 15$. ✓

$\Sigma F_L = \Sigma F_R$

$F_\mu + w\sin 15 = F\cos 12$

$0{,}2\ NR + 600\sin 15 = F\cos 12$ .....(2) ✓

In (1) $NR = 579{,}556 - F\sin 12$

sub in (2) $0{,}2(579{,}556 - F\sin 12) + 155{,}291 = F\cos 12$ ✓

$115{,}9112 - 0{,}2F\sin 12 + 155{,}291 = F\cos 12$

$271{,}2022 - 0{,}2F\sin 12 = F\cos 12$ ✓

$F(\cos 12 + 0{,}2\sin 12) = 271{,}2022$

$$F = \frac{271{,}2022}{\cos 12 + 0{,}2\sin 12}$$ ✓

$= 265{,}954\,N$ ✓ (7)

4.2
- Wear takes place as a result of friction.
- Extra power is required to overcome friction.
- Friction causes a loss in power. (3)

[10]

QUESTION 5: BRAKES

5.1 5.1.1 It is used to release the water and condensate in the reservoir and also to drain the reservoir and pipe lines.

5.1.2 Rapidly exhausts the line to the brake actuators.

(2 × 2) (4)

5.2
- Floating-caliper type.
- Fixed-caliper type. (2)

5.3 ADVANTAGES:
- Disc brakes are self-adjusting.
- Worn disc pads can be replaced easily and quickly.
- Wear on the pads can be seen without disassembling the system.
- Disc brakes are efficient, even when wet.
- Disc brakes take longer before they fade. (Any ONE) (1)

DISADVANTAGES
- The higher operating forces required, complicate the design of the handbrake mechanism.
- Disc brakes have no self-servo action, therefore higher operating pressures and forces are required. (Any ONE) (1)

[8]

QUESTION 6: FLUID DRIVES

6.1 Pressure imparted on the surface of a liquid is transmitted equally and impartially and in all directions throughout the liquid. (2)

6.2
- More compact in design
- Lower initial costs
- Lower maintenance costs
- No sensitive parts such as non-return valves
- Can be coupled directly to primary power source
- Needs smaller and lighter foundations
- Can pump dirty, corrosive and hot liquids
- Almost free of vibration
- Delivery is continuous and shock free
- Driving motors are smaller than those used for reciprocating pumps
- No air vessels are required
- Delivery can be controlled from full flow to no flow without shutting off the pump. (Any 5 × 1) (5)

6.3
- The press requires an intermittent high pressure supply because the work piece has to be removed and replaced.
- The accumulator stores the excess pressure when the press is idling or on the return stroke.
- Accumulators eliminate the need for large pumps. (2)

[9]

QUESTION 7: SAFETY PRECAUTIONS AND SAFETY DEVICES

7.1 7.1.1 The user shall maintain all floors on premises where machinery is used in a good, level and non-slipping condition, and so far as practically possible free from chips or other loose material.

7.1.2 No person working in close proximity to moving machinery shall wear or be permitted to wear loosely fitted outer clothing, jewellery, ornaments, watch or key chains or straps.

7.1.3 The user shall ensure that:

- Every rotating stock bar which extends beyond the end of a machine be guarded by means of either a fence or a substantially supported tubular guard covering the projecting stock bar.
- Every machine where cutting lubrications are used be equipped with a suitable splash guard or pan.
- The employer or occupier shall ensure that the factory is kept in a clean state and free from any smell or leakage arising from any drain or privy and from any other nuisance. (3 × 2) (6)

Copyright reserved

7.2
- Dross and refuse from metals, and waste matters or by-products whose nature is such that they are poisonous or capable of fermentation, putrefaction or constituting a nuisance shall be treated or disposed of by methods approved by an inspector.
- Lime washing of the interior walls of the factory and privies shall be carried out at such periods as may be directed by an inspecto, taking into consideration to the nature of the business and the character of the factory premises. (2 × 3) (6)

[12]

QUESTION 8: COUPLINGS AND CLUTCHES

8.1

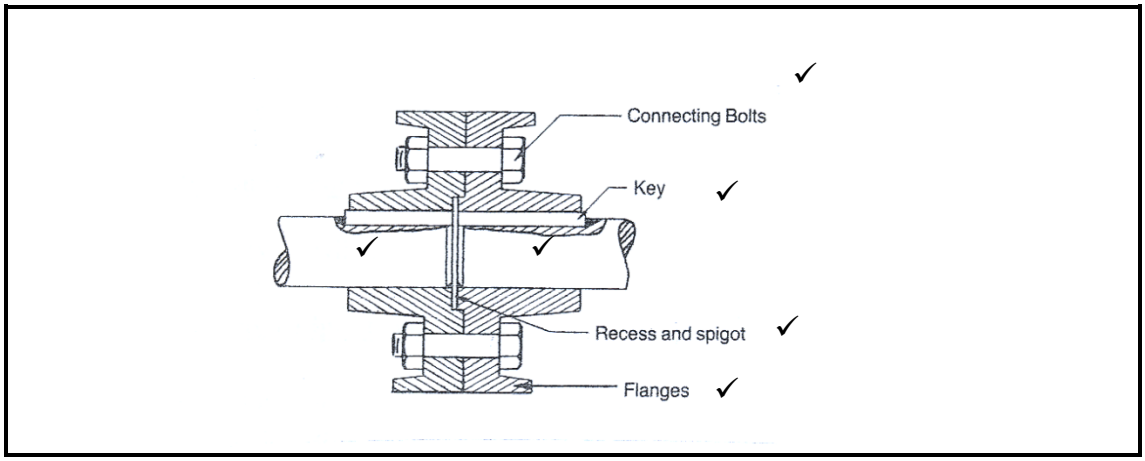

Correctness: THREE marks
Labelling: THREE marks (6)

8.2 Flexible couplings are used to connect shafts that are out of alignment (misalignment) laterally or angularly. Such couplings also permit some degree of axial movement in one or both shafts. They transmit power, accommodate misalignment, allow axial displacement and ensure no loss of lubricants in grease packed couplings. (3)

[9]

QUESTION 9: HEAT TREATMENT OF CARBON STEELS

9.1 9.1.1 Tenacity is the ability to resist fracture by a stretching force.

9.1.2 Hardness is the ability to resist abrasion, scratching, cutting or rubbing.

(2 × 1) (2)

9.2
- Very hard
- Wear resistant
- Shock resistant
- Has good cutting properties
- Can be hardened and used for tools (Any 4 × 1) (4)

9.3
- Optical pyrometer
- Thermo electric pyrometer (2)

[8]

QUESTION 10: ENGINEERING MATERIAL MANUFACTURING PROCESS

10.1 The purpose of the hardening process is to harden the steel enabling it to resist, wear and to cut other metals. It also makes the material more shock resistant. (2)

10.2
- Quenching is a rapid way of bringing a metal back to room temperature after heat treatment (such as annealing, normalising or stress relieving) to prevent the cooling process from dramatically changing the metal's microstructure.
- Quenching results in the hardening of steel at the same temperature that full annealing does. (3)

[5]

QUESTION 11: ALLOY METALS

11.1
- Copper
- Tin
- Antimony (3)

11.2
- Anti-friction alloy
- Corrosion resistant
- Wear resistant
- Soft
- Low in strength (Any 2 × 1) (2)

[5]

TOTAL: 100

Copyright reserved