higher education & training

Department:
Higher Education and Training
REPUBLIC OF SOUTH AFRICA

MARKING GUIDELINE

NATIONAL CERTIFICATE

MACHINES AND PROPERTIES OF METALS N4

20 April 2021

This marking guideline consists of 9 pages.

Copyright reserved

QUESTION 1

1.1
- Stretched V-belt cannot be shortened and re-joined like flat belts.
- V-belts cannot be crossed or rotate in opposite direction.
- V-belts cannot be used on fast and loose pulleys. (3)

1.2 GIVEN:

$\text{Single V} - \text{Belt}$
$\text{P} = 125\text{kW}$
$\text{V} = 1000\,\frac{\text{m}}{\text{min}}$
$\mu = 0{,}2$
$\theta = 170° = \frac{165°}{57{,}3} = 2{,}8796Rad$
$\emptyset = 40°$

1.2.1 $\text{RATIO OF BELT TENSIONS}\,\frac{T_1}{T_2}$

$\frac{T_1}{T_2} = \epsilon^{\frac{\mu\theta}{SIN\frac{\emptyset}{2}}}$ ✓
$\frac{T_1}{T_2} = 2{,}718^{\frac{0{,}2\times 2{,}8796}{SIN20°}}$ ✓
$\frac{T_1}{T_2} = 5{,}3854$
$\therefore Ratio = 5{,}3854:1$ ✓

1.2.2 $\text{EFFECTIVE TENSION } (T_1 - T_2)$
$\text{Power} = \text{work done/second}$
$\text{P} = \text{Force} \times \text{distance moved/second}$
$125 \times 10^3 = (T_1 - T_2) \times \frac{1000}{60}$ ✓
$(T_1 - T_2) = \frac{125\times 10^3 \times 60}{1000}$ ✓
$(T_1 - T_2) = 7500\text{N}$ ✓
$\therefore \text{effective tension} = 7500\text{N}$ ✓

1.2.3 $\text{TENSILE FORCE ON BELT TENSION } (T_1 + T_2)$
$\text{T}_1 - \text{T}_2 = 7500\text{N} - - - - - - - - - - - - (1)$ ✓
$\text{and}\,\frac{\text{T}_1}{\text{T}_2} = 5{,}3854$
$\therefore T_1 = 5{,}3854T_2 - - - - - - - - - - - - - (2)$ ✓
Substitute 2 in 1
$5{,}3854T_2 - T_2 = 7500$
$T_2 = 1710{,}22\text{N}$ ✓
$T_1 = 5{,}3854 \times 1710{,}22$
$T_1 = 9210{,}22\text{N}$ ✓

(3 × 4) (12)
[15]

QUESTION 2

A roller chain consists of inner and outer links. The inner link consists of two inner plates into which tow bushes are pressed and tow rollers which rotate on the bushes.✓ The outer link consists of two outer plates and two bearing pins. The connection of the inner links is done by✓ adding outer links.

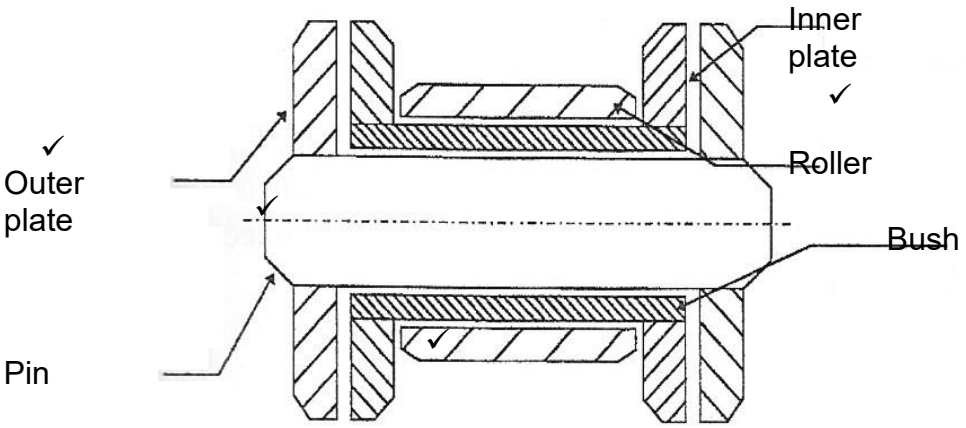

[6]

QUESTION 3

3.1
- Used in gear drive to change direction of rotation so that driven gear is in same direction as drive gear.
- Allows centre distance of driver and driven gears to be varied. (2)

3.2 3.2.1

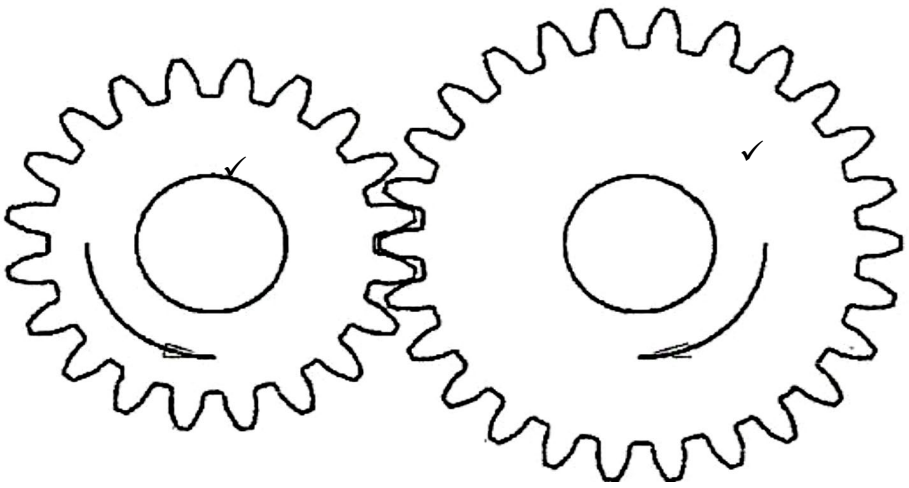

3.2.2

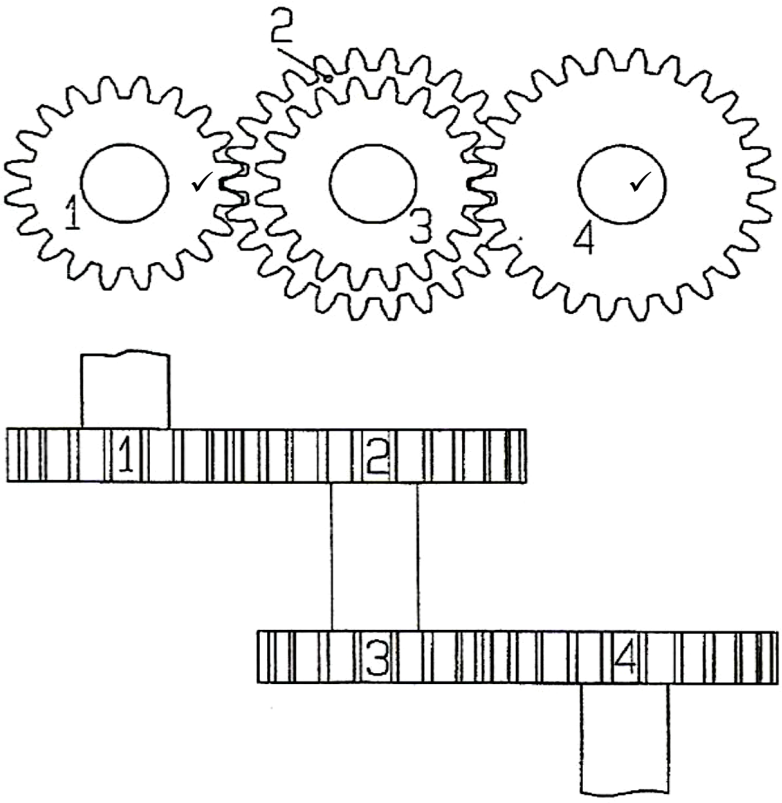

(2 × 2) (4)
[6]

QUESTION 4

A–Shaft
B–Key way
C–Centre block
D–Feather key
E–Driving shaft
F–Driving yoke **[6]**

QUESTION 5

5.1 $W = mg$ and $\mu = 0,6$

$W = 40 \times 9,81 = 392,4N$

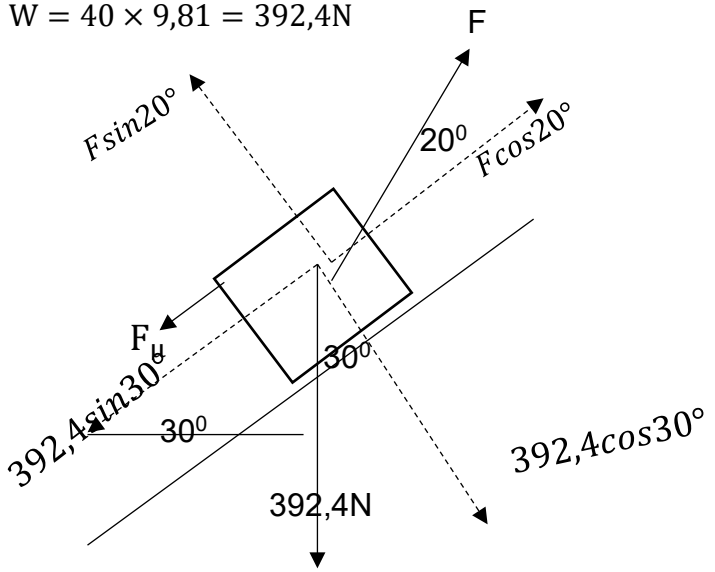

FOR UPWARD MOVEMENT

FIND F_μ

$F_\mu = \mu \times$ effective perpendicular force to sliding plane✓

$F_\mu = 0,6 \times (392,4\cos30° - F\sin20°)$✓

$F_\mu = 203,89 - 0,205F$✓

$F\cos20° = 392,4\sin30° + F_\mu$

$F\cos20° = 392,4\sin30° + 203,89 - 0,205F$

$0,94F = 196,2 + 203,89 - 0,205F$✓

$0,94F + 0,205F = 400,09$✓

$1.145F = 400,09$

$F = 349,43N$✓ (6)

5.2 $W = mg$ and $\mu = 0,6$

$W = 40 \times 9,81 = 392,4N$

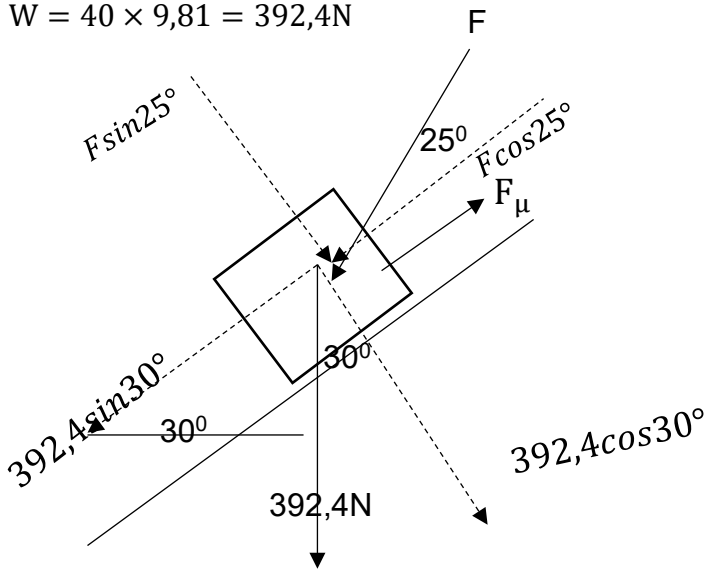

FOR DOWNWARD MOVEMENT

FIND F_μ

$F_\mu = \mu \times$ effective perpendicular force to sliding plane✓

$F_\mu = 0,6 \times (392,4\cos30° + F\sin25°)$✓

$F_\mu = 203,89 + 0,254F$✓

$F\cos25° + 392,4\sin30° = F_\mu$✓

$F\cos25° + 392,4\sin30° = 203,89 + 1,254F$

$0,91F + 196,2 = 203,89 + 0,254F$✓

$0,91F - 0,25F = 7,69$

$0.66F = 7,69$

$F = 11,69N$✓ (6)

[12]

QUESTION 6

6.1 6.1.1 The user shall cause all appliances, machinery and plant to be selected, arranged,✓ installed, protected, adjusted, worked and maintained so as to prevent danger to persons so far as is✓ practicable.✓

6.1.2 The user shall cause all floors✓ on premises where machinery is used to be maintained✓ in a good, level and non-slippery✓ condition and as far as practicable free from chips or other loose material.

6.1.3 Every user shall cause all safety appliances, devices or guards✓ to be maintained✓ in good working condition and to be properly used and shall stop the working of any machinery of which the using is or which appears likely to be, or to become dangerous✓ to persons in the vicinity thereof.

6.1.4 The user shall cause every shaft, pulley, wheel, gear, coupling, collar, clutch, friction drum and the like to be securely fenced or guarded unless it is in such a position and of such construction as to be as safe to every person as it would be if securely fenced or guarded.✓ Set screw, key or bolt on every revolving shaft, coupling, collar, friction drum, clutch, wheel, pulley, gear and the like to be countersunk, enclosed or otherwise guarded so as to prevent danger unless it is so situated as to be as safe as it would be if completely encased, unless it is not possible to guard such moving parts or machinery by virtue of the nature of the operation✓ thereof. No user shall require or permit a pulley to be used which is in any way damaged.✓

(4 × 3) (12)

6.2
- No employer shall allow anybody to work at night unless there is sufficient lighting (artificial) provided for such work to be carried out.
- The employer shall ensure that no employee shall work in a factory where that factory was constructed after current regulations were brought into effect, that has natural light of less than 15% of the floor area. Any doorways not provided with glass doors shall not be classified as avenues of natural light.
- The employer shall ensure that at all time any means of providing light such as windows, roof lights et cetera, shall be kept clean and in good repair. (3)

[15]

QUESTION 7

7.1 Advantages:
- Surface on which heat is generated directly exposed to air, therefore easier dissipating of heat obtained to prevent brake fade
- Self-adjusting
- Easily replaced
- Pedal travel not affected by heat as in case of drum brakes
- Independent of self-energising action and more progressive braking action obtained, as braking is proportional to applied force

Disadvantages:
- Booster necessary to increase applied force
- Smaller braking area and faster wearing of lining material
- Brake noise (7)

7.2 Brakes should automatically prevent load from falling✓ when hoisting power is removed.✓ (2)

7.3 Brake should allow drum to rotate freely in one direction but should lock itself✓ when drum begins to rotate in the opposite✓ direction. (2)

[11]

QUESTION 8

8.1 Increases brittleness as well as wear and abrasion resistance. With addition of up to 1% of chromium,✓ tensile strength is raised without reducing ductility. When approximately 12–18% is added, it gives the steel a high corrosion resistance quality.✓

8.2 Produces fine grain and increases toughness and strength without loss of ductility.✓ Decreases possibility of steel cracking when submerged during heat treatment.✓

8.3 Correct proportions,✓ will give steel more fatigue and heat resistance and increase its toughness.✓

(3 × 2) **[6]**

QUESTION 9

9.1 To change physical properties of✓ metal by heating it up and cooling it off.✓ (2)

9.2 9.2.1 Temperature at which carbon steel changes from pearlite to austenite when heated.

9.2.2 Temperature at which carbon steel changes back from austenite to pearlite when cooled.

9.2.3 Lowest temperature to which steel must be heated to be hardened.

(3 × 1) (3)

9.3
- Toughness
- Hardness
- Wear resistance (3)

[8]

QUESTION 10

10.1
- It is 4 times larger capacities than Bessemer vessels.
- Quality control of steel much better than with Bessemer or open-hearth processes.
- Cleaner steel with higher carbon content produced.
- Bottoms of vessel last much longer than Bessemer converters.
- Reduced air pollution. (5)

10.2
- Grey iron
- White iron
- Malleable iron (3)

[8]

QUESTION 11

11.1
- Reciprocating piston or plunger, operating within cylindrical barrel.
- Oscillating, or rotating blade or pair of meshing gear wheels working inside casing, such as semi-rotary pumps.
- Rotating vaned wheel such as centrifugal pump.
- Current of air, such as air-lift pumps. (4)

11.2
- If strainer is not completely submerged in water, air can slip into suction pipe resulting in air and water being pumped.
- Inefficient foot valve causes water slipping back into sump on delivery stroke resulting in loss of efficiency.
- Loose joints or flanges on suction column cause air to slip in with water, leading to inefficient operations.
- Suction valves not opening and closing promptly causes water to slip back into sump on delivery stroke.
- Inefficient internal packing lets water slip into right chamber when the plunger is travelling to the left, and vice versa, resulting in inefficient operation.
- Inefficient external packing lets water slip out on delivery stroke and air slips in on suction stroke. (Any 3 × 1) (3)

[7]

TOTAL: 100

Copyright reserved