higher education & training

Department:
Higher Education and Training
REPUBLIC OF SOUTH AFRICA

NATIONAL CERTIFICATE

MACHINES AND PROPERTIES OF METALS N4

(8190054)

15 April 2020 (X-paper)
09:00–12:00

Nonprogrammable calculators may be used.

This question paper consists of 6 pages and a formula sheet of 2 pages.

247Q1A2015

Copyright reserved

DEPARTMENT OF HIGHER EDUCATION AND TRAINING
REPUBLIC OF SOUTH AFRICA

NATIONAL CERTIFICATE
MACHINES AND PROPERTIES OF METALS N4
TIME: 3 HOURS
MARKS: 150

INSTRUCTIONS AND INFORMATION

1. Answer all the questions.
2. Read all the questions carefully.
3. Number the answers according to the numbering system used in this question paper.
4. All calculations must be rounded off to THREE decimals.
5. Write neatly and legibly.

Copyright reserved

QUESTION 1: POWER TRANSMISSION BELT AND ROPE DRIVES

1.1 Write down FOUR facts to consider when selecting the most suitable belting material for a flat-belt drive. (4)

1.2 Calculate the width of a belt needed to transmit 1650 watts by means of a 0,8 m diameter pulley running at 260 r/min. The ratio of the belt tension is 2,5.

The maximum allowable pull in the belt must not exceed 1,7 N per mm width of belt. (12)
[16]

QUESTION 2: ROLLER CHAIN DRIVES

2.1 A roller chain drive must never run with both sides tight.

Explain how you would check for correct sag on a horizontal chain drive as well as a vertical chain drive. (4)

2.2 Explain how manual lubrication should be performed to maintain the chain in working order as long as possible. (2)
[6]

QUESTION 3: POWER TRANSMISSION GEAR DRIVES

Name the indicated parts of the involute gear tooth below by writing the answer next to the letter (A–F) in the ANSWER BOOK.

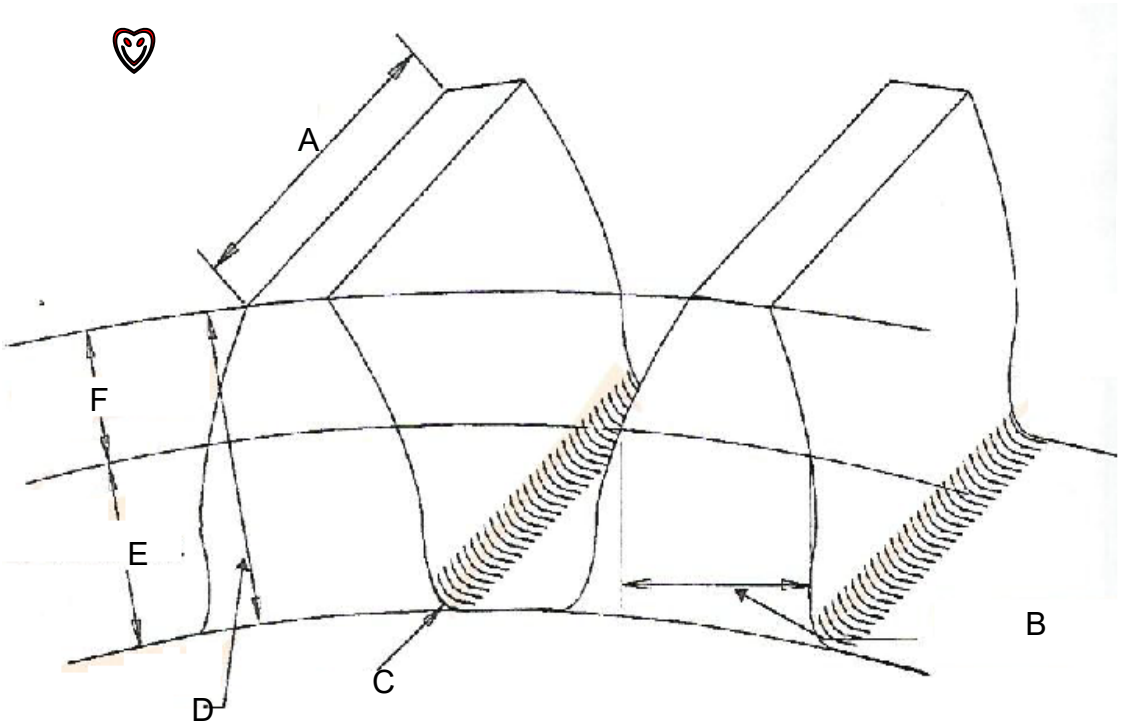

INVOLUTE GEAR TOOTH **[6]**

QUESTION 4: POWER TRANSMISSION COUPLINGS AND CLUTCHES

4.1 Explain the difference between a *coupling* and a *clutch*. (2)

4.2 Name the THREE groups into which couplings are classified and give one example for each group. (6)
[8]

QUESTION 5: FRICTION

5.1 Name TWO places in the workshop where friction can be used to advantage. (2)

5.2 A casting with a mass of 8 kg is at rest on an inclined plane making an angle of 12° with the horizontal. The coefficient of friction is 0,4.

Calculate the smallest force parallel to the plane needed to allow the casting to move in the following way:

5.2.1 Up the incline

5.2.2 Down the incline

(2 × 4) (8)
[10]

QUESTION 6: SAFETY PRECAUTIONS/DEVICES

6.1 Describe each of the following regulations regarding the Occupational Health and Safety Act, No 85 of 1993:

6.1.1 Loose outer clothing

6.1.2 Conditions of floors

6.1.3 Revolving machinery

(3 × 3) (9)

6.2 State the following as amended in the Occupational Health and Safety Act No 85 of 1993:

6.2.1 TWO regulations applicable to grinding wheels

6.2.2 TWO regulations applicable to the earthing of machines

(2 + 2) (4)

6.3 The Occupational Health and Safety Act No 85 of 1993 prescribe certain requirements for the starting and stopping of machines.

Discuss the safety of the worker regarding electrically-driven machines operated by more than one person. (2)
[15]

Copyright reserved

QUESTION 7: BRAKES

7.1 The headstock spindle of a lathe sometimes needs to be brought to an emergency stop.

Explain the working operation of this emergency brake in THREE steps. (6)

7.2 Write down FIVE strength and frictional characteristics that brake lining material must have. (5)

[11]

QUESTION 8: ALLOY METALS

8.1 State THREE disadvantages of alloy steels. (6)

8.2 What effects does the addition of tungsten have on plain carbon steel? (2)

[8]

QUESTION 9: HEAT TREATMENT OF CARBON STEEL

9.1 Explain the reason for the tempering of tools after hardening. (2)

9.2 When a work-piece is manufactured it is sometimes necessary that certain parts remain soft.

Explain THREE methods of obtaining soft parts of a workpiece. (6)

[8]

Copyright reserved

QUESTION 10: ENGINEERING MATERIALS: MANUFACTURING PROCESSES

10.1 Why is oxygen used in the making of steel? (3)

10.2 Name the furnace in which oxygen is used for the manufacturing of steel. (1)

10.3 A theoretical knowledge of the properties of material is vital to choose the correct material for a particular job.

Explain each of the following properties:

10.3.1 Tenacity

10.3.2 Compressibility

(2 × 1) (2)
[6]

QUESTION 11: FLUID DRIVES

Name SIX elements that make up a simple hydraulic circuit and give the function of each element. **[6]**

TOTAL: 100

Copyright reserved

MACHINES AND PROPERTIES OF METALS N4

FORMULA SHEET

Any other applicable formula may be used.

FRICTION FORMULAE

$W = mg$

$\text{Coefficient of static friction } (\mu) = \dfrac{\text{friction force}}{\text{Perpendicular force between surfaces}}$

$\text{Coefficient of kinetic friction friction } (\mu) = \dfrac{\text{friction force}}{\text{Normal reaction force between surfaces}}$

$\text{Tan}\emptyset = \mu$

$F_\mu = \mu \times mg$

Movement downwards against an incloine plane (Slope)

$F_\mu = \mu \times W\text{Cos}\theta$

$F = \mu \times W\text{Cos}\theta - W\text{Sin}\theta$

$F_{down} = F_\mu - W\text{Sin}\theta$

Movement upwards against an incloine plane (Slope)

$F_\mu = \mu \times W\text{Cos}\theta$

$F = \mu \times W\text{Cos}\theta + W\text{Sin}\theta$

$F_{up} = F_\mu + W\text{Sin}\theta$

BELT AND ROPE DRIVE FORMULAE

$V = \dfrac{\pi \times D \times N}{60}$

$V = \dfrac{\pi \times (D + t) \times N}{60}$

$\text{Effective tension} = (T_1 - T_2)$

$\text{Power} = (T_1 - T_2) \times \dfrac{\pi \times D \times N}{60}$

$1\text{Pa} = 1\text{N per m}^2$

Negleting Centrifugal tension (T_c)

Flat Belt

$\dfrac{T_1}{T_2} = e^{\mu\theta}$

Rope and V − belt

$\dfrac{T_1}{T_2} = e^{\frac{\mu\theta}{Sin\frac{\emptyset}{2}}}$

Considering Centrifugal tension (T_c)

Flat Belt

$\dfrac{T_1 - T_c}{T_2 - T_c} = e^{\mu\theta}$

Rope and V − belt

$\dfrac{T_1 - T_c}{T_2 - T_c} = e^{\frac{\mu\theta}{\text{Sin}\frac{\emptyset}{2}}}$

$T_c = \text{Mass} \times V^2$

$\text{Mass} = \text{Density}\left(\dfrac{\text{kg}}{\text{m}^2}\right) \times \dfrac{\text{Volume}}{\text{m}}\left(\dfrac{m^3}{\text{m}}\right)$

$\text{Initial tension in belt} = \dfrac{T_1 + T_2}{2}$

Copyright reserved

OPEN BELT

$$\text{Length} = \frac{\pi}{2}(D + d) + \frac{(D - d)^2}{4C} + 2C$$

Angle of lap (θ)

$$\text{Cos}\ \frac{\emptyset}{2} = \frac{R - r}{C}$$

CROSSED BELT

$$\text{Length} = \frac{\pi}{2}(D + d) + \frac{(D + d)^2}{4C} + 2C$$

Angle of lap (θ)

$$\text{Cos}\ \frac{\emptyset}{2} = \frac{R - r}{C}\ \emptyset = 360° - \emptyset$$

$$\text{Belt pull on bearing} = (T_1 - T_2)$$

$$\text{Safe Stress} = \frac{T_1}{\text{Width} \times \text{Thickness}}$$

Copyright reserved