higher education & training

Department:
Higher Education and Training
REPUBLIC OF SOUTH AFRICA

T980**(E)**(A10)T

NATIONAL CERTIFICATE

MACHINES AND PROPERTIES OF METALS N4

(8190054)

10 April 2019 (X-Paper)
09:00–12:00

Nonprogrammable calculators may be used.

This question paper consists of 6 pages and a formula sheet of 2 pages.

Copyright reserved

DEPARTMENT OF HIGHER EDUCATION AND TRAINING
REPUBLIC OF SOUTH AFRICA

NATIONAL CERTIFICATE
MACHINES AND PROPERTIES OF METALS N4
TIME: 3 HOURS
MARKS: 100

INSTRUCTIONS AND INFORMATION

1. Answer ALL the questions.
2. Read ALL the questions carefully.
3. Number the answers according to the numbering system used in this question paper.
4. Round off ALL calculations to THREE decimals.
5. Write neatly and legibly.

NOTE: The Safety Act has evolved over the years and is now referred to as the Occupational Health and Safety Act 85 of 1993. The content is the same with regards to the syllabus, only the act number and years have changed.

Copyright reserved

QUESTION 1: POWER TRANSMISSION BELT DRIVES AND ROPE DRIVES

1.1 Complete the following paragraph by writing down the missing word next to the question number (1.1.1–1.1.8) in the ANSWER BOOK.

One of the principal features of belt driving compared to other forms of gearing like toothed gearing or chain gearing is the absence of (1.1.1) … Belts do not transmit (1.1.2) … and under a sudden heavy load they tend to (1.1.3) … on the pulley and perhaps thus prevent (1.1.4) … to the (1.1.5) … or (1.1.6) … and save considerable (1.1.7) … . Belting is especially suited when the distance between the shafts is (1.1.8) … (8)

1.2 A pulley with a diameter of 250 mm drives a leather belt 100 mm wide and 10 mm thick at 800 r/min. The allowable tensile stress in the belt is $1{,}38 \times 10^6$ N/m^2, and the assumed force on the tight side of the belt is 2,2 times that on the slack side.

Calculate the power transmitted by the belt. (8)
[16]

QUESTION 2: ROLLER CHAIN DRIVES

2.1 Give FOUR reasons why covers are fitted to chain drives. (4)

2.2 Name TWO uses of a single-roller chain drive. (2)
[6]

QUESTION 3: POWER TRANSMISSION GEAR DRIVES

The sketch below shows the meshing of a pinion gear with a spur gear.

Give the information for the parts indicated from E to I and ϕ by writing down the answer next to the letter (E–I) and the symbol (ϕ) in the ANSWER BOOK.

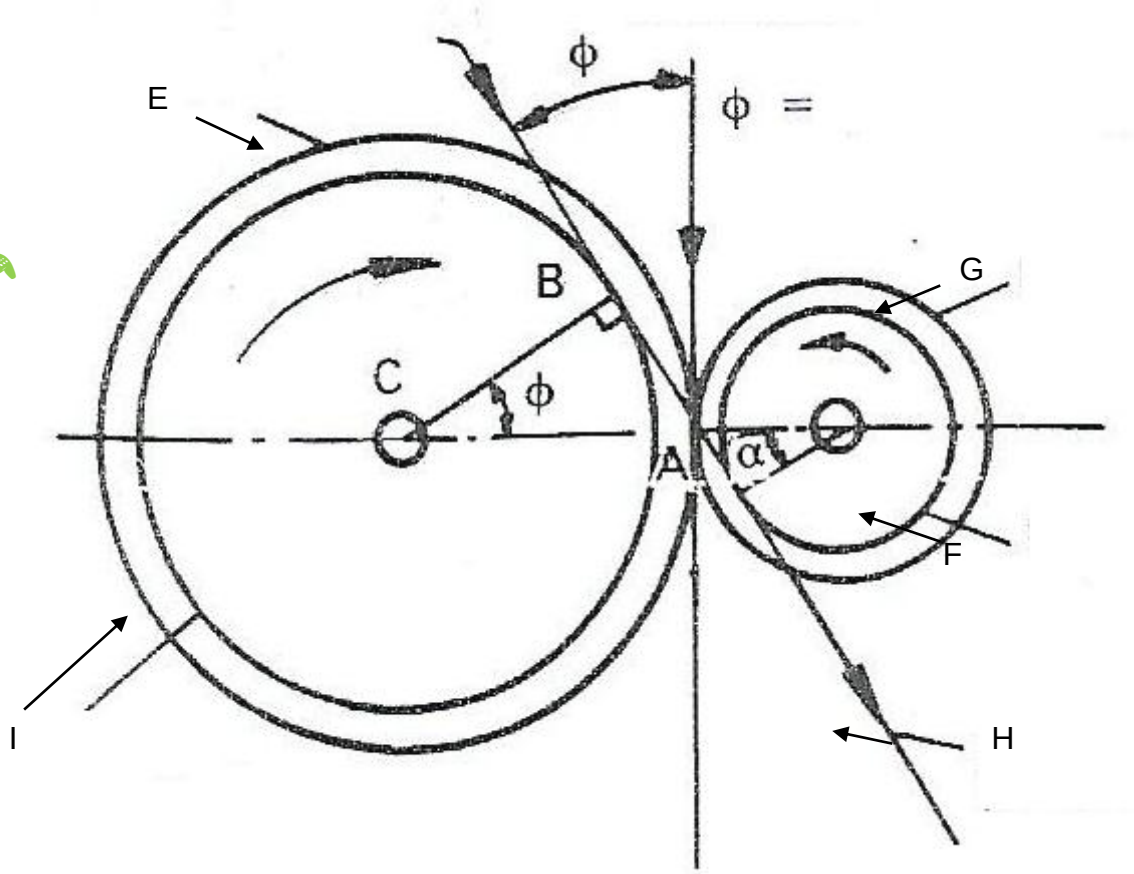

[6]

QUESTION 4: POWER TRANSMISSION COUPLINGS AND CLUTCHES

Explain the design of a muff coupling with the aid of a neat sketch. **[6]**

QUESTION 5: FRICTION

5.1 A steel workpiece with a mass 5 kg is placed on a marking-off table. It is held down by a magnetic force of 450 N from below the table.

Determine the maximum force that may be applied horizontally on the work-piece so that it remains in the same position. The coefficient of friction between the workpiece and the table is 0,3. (6)

5.2 A workpiece has a weight of 45 N and is placed on an inclined plane of 30°. The coefficient of friction between the two contact faces is 0,325.

Calculate the force parallel to the plane that would be required to haul the workpiece up the plane.

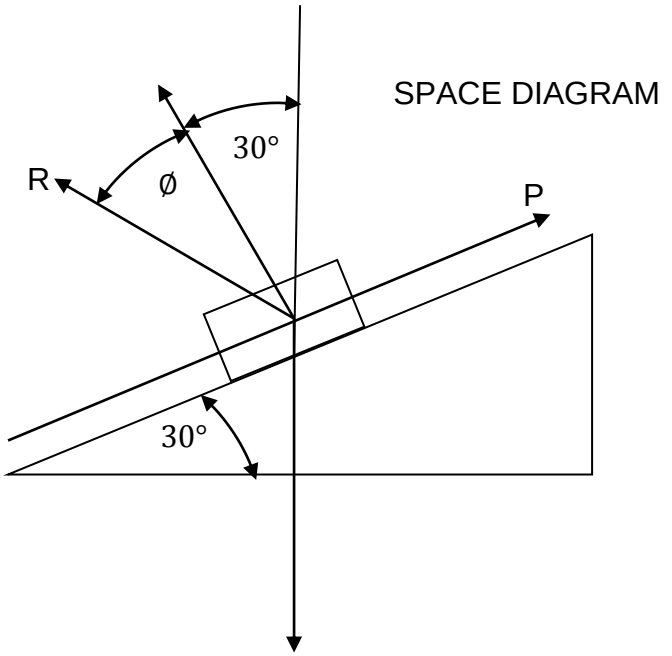

(6)
[12]

QUESTION 6: SAFETY PRECAUTIONS/DEVICES

6.1 State TWO regulations regarding lifting gear. (4)

6.2 State FIVE important general safety precautions in the fitting shop and explain why each is important. (5)

6.3 Give the regulations regarding the following as stated in the Occupational Health and Safety Act 85 of 1993:

6.3.1 Loose outer clothing

6.3.2 Conditions of floors

(2 × 2) (4)

6.4 Name THREE causes of fires in workshops. (3)
[16]

QUESTION 7: BRAKES

7.1 State FOUR general requirements for brake linings. (4)

7.2 Explain, with the aid of a simple sketch, the working of a cone type of brake and name the type of machine on which it would be used. (6)

[10]

QUESTION 8: ALLOY METALS

8.1 Explain *alloy steels*. (3)

8.2 Describe each of the following alloy steels and give ONE example of its use in engineering:

8.2.1 Nickel steel

8.2.2 Tungsten steel

8.2.3 Manganese steel

(3 × 2) (6)

[9]

QUESTION 9: HEAT TREATMENT OF CARBON STEELS

Give a step-by-step description of hardening and tempering a flat chisel. **[7]**

QUESTION 10: ENGINEERING MATERIALS: MANUFACTURING PROCESSES

Name THREE main groups of cast iron and give ONE practical use of each group. **[6]**

QUESTION 11: FLUID DRIVES

State SIX causes for the leakage of water in a pump, which is known as slip. **[6]**

TOTAL: 100

Copyright reserved

MACHINES AND PROPERTIES OF METALS N4

FORMULA SHEET

Any other applicable formula may also be used.

FRICTION

$W = mg$

$$\text{Coefficent of static friction } (\mu) = \frac{\text{friction force}}{\text{Perpendicular force between surfaces}}$$

$$\text{Coefficent of kinetic friction } (\mu) = \frac{\text{friction force}}{\text{Normal reaction force between surfaces}}$$

$\text{Tan } \phi = \mu$

$F_{\mu} = \mu \times mg$

Movement downwards against an incline plane (Slope)

$F_{\mu} = \mu \times W\text{Cos}\theta$

$F = \mu \times W\text{Cos}\theta - W\text{sin}\theta$

$F_{down} = F_{\mu} - W\text{sin}\theta$

Movement upwards against an incline plane (Slope)

$F_{\mu} = \mu \times W\text{Cos}\theta$

$F = \mu \times W\text{Cos}\theta + W\text{sin}\theta$

$F_{up} = F_{\mu} + W\text{sin}\theta$

Copyright reserved

BELT AND ROPE DRIVES

$V=\frac{\pi\times D\times N}{60}$

$V=\frac{\pi\times(D+t)\times N}{60}$

Effective tension$=(T_1-T_2)$

Power $=(T_1-T_2)\times\frac{\pi\times D\times N}{60}$

1 Pa = 1N per m^2

Neglecting Centrifugal tension (T_c)

Flat belt $\frac{T_1}{T_2}=e^{\mu\theta}$

Rope and V-belt $\frac{T_1}{T_2}=e^{\frac{\mu\theta}{\sin\frac{\phi}{2}}}$

Considering Centrifugal tension (T_c)

Flat belt $\frac{T_1-T_c}{T_2-T_c}=e^{\mu\theta}$

Rope and V-belt $\frac{T_1-T_c}{T_2-T_c}=e^{\frac{\mu\theta}{\sin\frac{\phi}{2}}}$

T_c = Mass $\times V^2$

Mass = Density$(kg/m^3)\times$Volume/m(m^3/m)

Initial tension in belt = $\frac{T_1+T_2}{2}$

OPEN BELT

Lenght = $\frac{\pi}{2}(D+d)+\frac{(D-d)^2}{4c}+2c$

Angle of lap(θ)

$\cos\frac{\phi}{2}=\frac{R-r}{C}$

CROSSED BELT

Lenght = $\frac{\pi}{2}(D+d)+\frac{(D+d)^2}{4c}+2c$

Angle of lap(θ)

$\cos\frac{\phi}{2}=\frac{R-r}{C}$ and $\phi=360°-\phi$

Belt pull on bearing = (T_1+T_2)

Safe stress = $\frac{T_1}{\text{Width}\times\text{thickness}}$

Copyright reserved