higher education & training

Department:
Higher Education and Training
REPUBLIC OF SOUTH AFRICA

T980**(E)**(A9)T

NATIONAL CERTIFICATE

MACHINES AND PROPERTIES OF METALS N4

(8190054)

9 APRIL 2018 (X-Paper)
09:00–12:00

A nonprogrammable calculator may be used.

This question paper consists of 6 pages and 2 formula sheets.

Copyright reserved

DEPARTMENT OF HIGHER EDUCATION AND TRAINING
REPUBLIC OF SOUTH AFRICA

NATIONAL CERTIFICATE
MACHINES AND PROPERTIES OF METALS N4
TIME: 3 HOURS
MARKS: 100

INSTRUCTIONS AND INFORMATION

1. Answer ALL the questions.
2. Read ALL the questions carefully.
3. Number the answers according to the numbering system used in this question paper.
4. ALL calculations must be correctly rounded off to THREE decimal places.
5. Write neatly and legibly.

Copyright reserved

QUESTION 1: FRICTION

1.1 A steel container filled with steel is pulled upwards against an incline of 30° by a tractor. The mass of the steel container is 1,2 tons. The pulling force of the rope forms an angle of 15° with the incline. The coefficient of friction between the surfaces in contact is 0,3.

Calculate the tensile force in the rope. (6)

1.2 State FOUR principles of kinetic friction. (4)
[10]

QUESTION 2: POWER TRANSMISSION BELT DRIVES AND ROPES

The following information applies to a V-belt drive transmitting 42 kW:

Effective diameter of motor pulley	= 875×10^{-3} m
Speed of the motor pulley	= 3,762 r/s
The V-groove angle of the pulley	= 43°
Coefficient of friction	= 0,27
Contact angle of the belt	= 187°
Mass of the belt	= 0,98 kg per metre length
Maximum allowable tension per belt	= 710 N
Efficiency of the drive	= 83%

Determine:

2.1 The belt speed (2)

2.2 The centrifugal force (2)

2.3 The input power (2)

2.4 The tension in the tight and slack sides of the belt (6)

2.5 The number of V-belts (2)
[14]

QUESTION 3: POWER TRANSMISSION CHAIN DRIVES

3.1 Name FOUR basic methods of lubrication of a chain drive and the allowable speed in metres per minute for each type of lubrication. (4)

3.2 Draw a fully labelled diagram of a roller chain drive mechanism. (4)
[8]

Copyright reserved

QUESTION 4: POWER TRANSMISSIONS: GEAR DRIVES

4.1 State FOUR advantages of the use of helical gears compared to spur gears. (4)

4.2 Draw a diagram of spur gears and explain their operation. (5)
[9]

QUESTION 5: POWER TRANSMISSION COUPLINGS AND CLUTCHES

5.1 Make a sketch of a muff coupling. (4)

5.2 Explain the basic functions of a coupling. (4)
[8]

QUESTION 6: BRAKES

Label the components A to I of the mechanical braking system shown below.

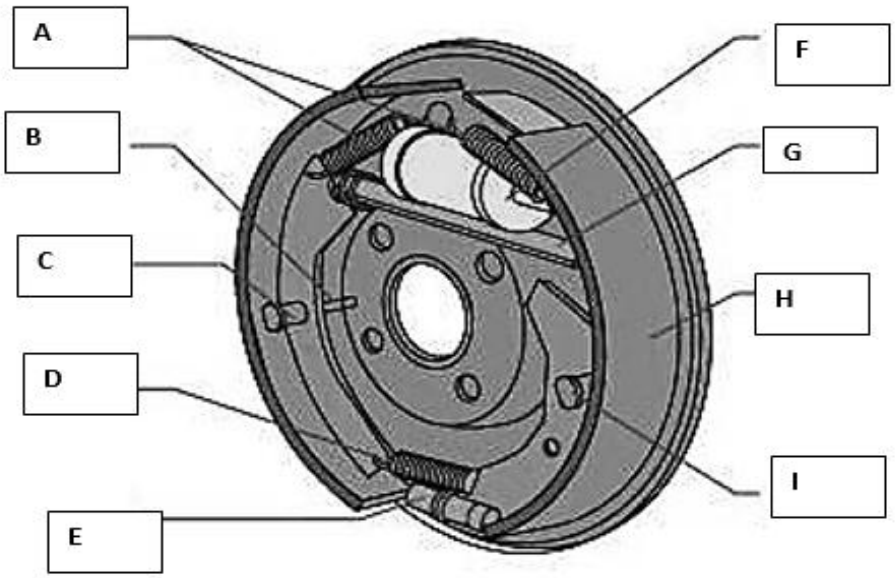

[9]

QUESTION 7: ENGINEERING MATERIALS: MANUFACTURING PROCESS

7.1 State FOUR advantages of the use of the LD and Kaldo processes in the manufacturing of steel. (4)

7.2 Show, on separate drawings, the element of an optical pyrometer's bulb if the temperature in the furnace is:

7.2.1 Colder than the reading on the pyrometer

7.2.2 Equal to the reading on the pyrometer

7.2.3 Hotter than the reading on the pyrometer

(3 × 2) (6)
[10]

QUESTION 8: SAFETY PRECAUTIONS/DEVICES

8.1 Referring to the Factories, Machinery and Building Work Act of 1941, as amended.

Describe the regulations regarding:

8.1.1 Loose outer clothing

8.1.2 Clear space

(2 × 3) (6)

8.2 Clause B13 of the Factories, Machinery and Building Work Act of 1941 refers to fire precautions.

Discuss the regulations regarding:

8.2.1 The means of escape

8.2.2 The doors of the factory

8.2.3 The staircase leading from one floor to another or to the ground

(3 × 1) (3)

Copyright reserved

8.3 Referring to the Factories, Machinery and Building Work Act of 1941, as amended, the user has to comply with certain requirements where electrical apparatus is used in hazardous locations.

Discuss the regulations regarding:

8.3.1 Effecting of repairs or adjustments to apparatus

8.3.2 The authority of the chief inspector

(2 × 1) (2)
[11]

QUESTION 9: FLUID DRIVES

9.1 State FOUR advantages of *torque converters* over *hydraulic couplings*. (4)

9.2 Describe TWO essential differences between a *pump plunger* and a *pump piston*. (2)

9.3 Explain why a reciprocating pump will not deliver hot water. (3)
[9]

QUESTION 10: ALLOY METALS

Define the following terms with regards to alloying metals in steel:

10.1 Alloy (1)

10.2 Direct effects (2)

10.3 Indirect effects (2)
[5]

QUESTION 11: HEAT TREATMENT OF CARBON STEELS

11.1 Give TWO examples of each of the following group of metals:

11.1.1 Nonferrous metals

11.1.2 Ferrous metals

(2 × 2) (4)

11.2 Explain the process of annealing. (3)
[7]

TOTAL: 100

Copyright reserved

MACHINES AND PROPERTIES OF METALS N4

FORMULA SHEET

Any other applicable formula may be used.

FRICTION

Formulae

$W = mg$

$$\text{Coefficent of static friction } (\mu) = \frac{\text{friction force}}{\text{Perpendicular force between surfaces}}$$

$$\text{Coefficent of kinetic friction } (\mu) = \frac{\text{friction force}}{\text{Normal reaction force between surfaces}}$$

$\text{Tan } \phi = \mu$

$F_{\mu} = \mu \times mg$

Movement downwards against an incline plane (Slope)

$F_{\mu} = \mu \times W\text{Cos}\theta$

$F = \mu \times W\text{Cos}\theta - W\text{sin}\theta$

$F_{down} = F_{\mu} - W\text{sin}\theta$

Movement upwards against an incline plane (Slope)

$F_{\mu} = \mu \times W\text{Cos}\theta$

$F = \mu \times W\text{Cos}\theta + W\text{sin}\theta$

$F_{up} = F_{\mu} + W\text{sin}\theta$

Copyright reserved

FORMULA SHEET

$V=\frac{\pi\times D\times N}{60}$

$V=\frac{\pi\times(D+t)\times N}{60}$

Effective tension $=(T_1-T_2)$

Power $=(T_1-T_2)\times\frac{\pi\times D\times N}{60}$

1 Pa = 1N per m^2

Neglecting Centrifugal tension (T_c)

Flat belt $\frac{T_1}{T_2}=e^{\mu\theta}$

Rope and V-belt $\frac{T_1}{T_2}=e^{\frac{\mu\theta}{\sin\frac{\phi}{2}}}$

Considering Centrifugal tension (T_c)

Flat belt $\frac{T_1-T_c}{T_2-T_c}=e^{\mu\theta}$

Rope and V-belt $\frac{T_1-T_c}{T_2-T_c}=e^{\frac{\mu\theta}{\sin\frac{\phi}{2}}}$

T_c = Mass × V^2

Mass = Density$(kg/m^3)\times$Volume/m(m^3/m)

Initial tension in belt $=\frac{T_1+T_2}{2}$

OPEN BELT

Lenght $=\frac{\pi}{2}(D+d)+\frac{(D-d)^2}{4c}+2c$

Angle of lap(θ)

$\cos\frac{\phi}{2}=\frac{R-r}{C}$

CROSSED BELT

Lenght $=\frac{\pi}{2}(D+d)+\frac{(D+d)^2}{4c}+2c$

Angle of lap(θ)

$\cos\frac{\phi}{2}=\frac{R-r}{C}$ and $\phi=360°-\phi$

Belt pull on bearing $=(T_1+T_2)$

Safe stress $=\frac{T_1}{\text{Width}\times\text{thickness}}$

Copyright reserved