higher education & training

Department:
Higher Education and Training
REPUBLIC OF SOUTH AFRICA

# MARKING GUIDELINE

## NATIONAL CERTIFICATE

## MACHINES AND PROPERTIES OF METALS N4

## 9 APRIL 2018

**This marking guideline consists of 7 pages.**

Copyright reserved

## QUESTION 1: FRICTION

1.1 $F \times \cos \alpha = W \times \text{Sin } Ø + \mu(W \times \cos Ø - F \times \sin \alpha)$✓

$F \times 0,966 = 1\,200 \times 9,8 \times \text{Sin}30° + 0,3(1\,200 \times 9,8 \times \text{Cos}30° - 0,259F)$✓

$0,966 \times F = 5\,880 + 0,3\,(10\,184,459 - 0,259 \times F)$✓

$0,966 \times F = 5\,880 + 3\,055,338 - 0,078 \times F$

$0,966 \times F + 0,078 \times F = 8\,935,338$✓

$1,044 \times F = 8\,935,338$

$F = \frac{8\,935,338}{1,044}$✓

$F = 8\,558,753$ N or 8,559 kN✓ (6)

1.2
- Friction depends on the nature of the surfaces in contact.
- It is independent of the speed.
- It is Independent of the size of the area in contact.
- It is proportional to the perpendicular force between the surfaces. (4)

**[10]**

## QUESTION 2: POWER TRANSMISSION BELT DRIVES AND ROPES

2.1 $V = \frac{\pi DN}{}$

$= \frac{\pi \text{ x } 875.10^{-3} \times 3,762}{}$ ✓

$= 10.34 \text{ m/s}$ ✓ (2)

2.2 $T_C = mv^2$

$= 0,98 \times 10,34^2$ ✓

$= 104,78 \text{ N}$ ✓ (2)

2.3 $P_{in} = \frac{P_O}{\eta}$

$= \frac{42\,000}{0,83}$ ✓

$= 44\,300 \text{ W}$

$= 50,602 \text{ kW}$ ✓ (2)

2.4

$$\frac{T_1 - T_C}{T_2 - T_C} = e^{\frac{187 \times 0,27}{57,3 \times \text{s in } 21,5^0}} \quad \checkmark$$

$$\frac{T_1 - 104,78}{T_2 - 104,78} = 11,07 \quad \checkmark$$

$$T_1 - 104,78 = 11,07(T_2 - 104,78) \quad \checkmark$$

$$T_1 - 104,78 = 11,07T_2 - 1160 \quad \text{.....(2)}$$

Substituting (1) into (2) yields

$$4\ 893,85 + T_2 - 104,78 = 11,07T_2 - 1\ 160$$

$$11,07T_2 - T_2 = 4893,85 + 1\ 160 - 104,78$$

$$10,07T_2 = 5\,949,07 \quad \checkmark$$

$$T_2 = \frac{5\,949,07}{10,07}$$

$$= 590,77 \text{ N} \quad \checkmark$$

$$T_1 = 4\,893,85 + T_2$$

$$= 4\,893,85 + 5\,90,77$$

$$= 5484,62 \text{ N} \quad \checkmark$$

(6)

2.5

$$n = \frac{T_1}{\text{Force}_{\text{maxi}}}$$

$$= \frac{5\,484,62}{710} \quad \checkmark$$

$$= 7,725$$

$$= 8 \text{ belts} \checkmark$$

(2)
**[14]**

## QUESTION 3: POWER TRANSMISSION CHAIN DRIVES

3.1

| | |
|---|---|
| Manual lubrication | – 30 metres/minute |
| Drip-feed lubrication | – 100 metres/minute |
| Oil bath lubrication | – 500 metres/minute |
| Oil stream lubrication | – 500 metres/minute and higher |

(4)

3.2

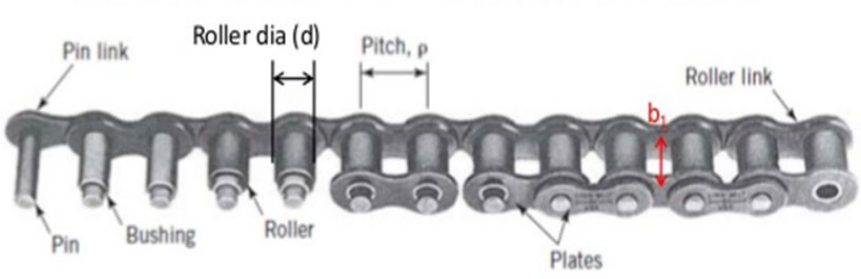


(Any 4 × 1 ) (4)
**[8]**

## QUESTION 4: POWER TRANSMISSIONS: GEAR DRIVES

4.1
- Gradual contact between teeth
- Can transmit more power
- Initial loads on teeth tips are eliminated
- Higher wear resistant
- Smoother transmission and quieter (Any 4 × 1) (4)

4.2 Spur gears consist of a cylinder or disk with teeth projecting radially.✓ Though the teeth are not straight-sided, the edge of each tooth is straight and aligned parallel to the axis of rotation. These gears mesh together correctly only if fitted to parallel shafts.✓

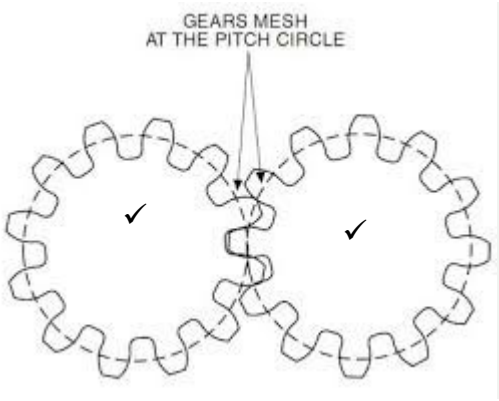


(Explanation - 2 marks)
(Diagram - 3 marks) (5)
**[9]**

## QUESTION 5: POWER TRANSMISSION COUPLINGS AND CLUTCHES

5.1

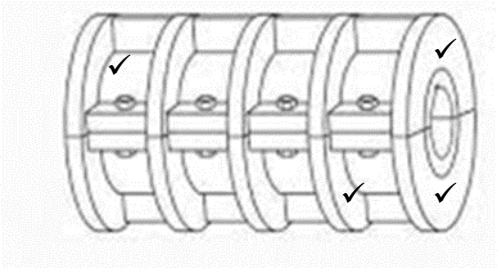

(4)

5.2 The basic function of all coupings is to transmit power, accommodate misalignment✓ and compensate for axial movement (end movement of shafts).✓ Sometimes, a coupling is asked to absorb shock or vibration.✓ Selecting the right coupling depends on four basic conditions of shaft misalignment or movement.✓ (4)
**[8]**

## QUESTION 6: BRAKES

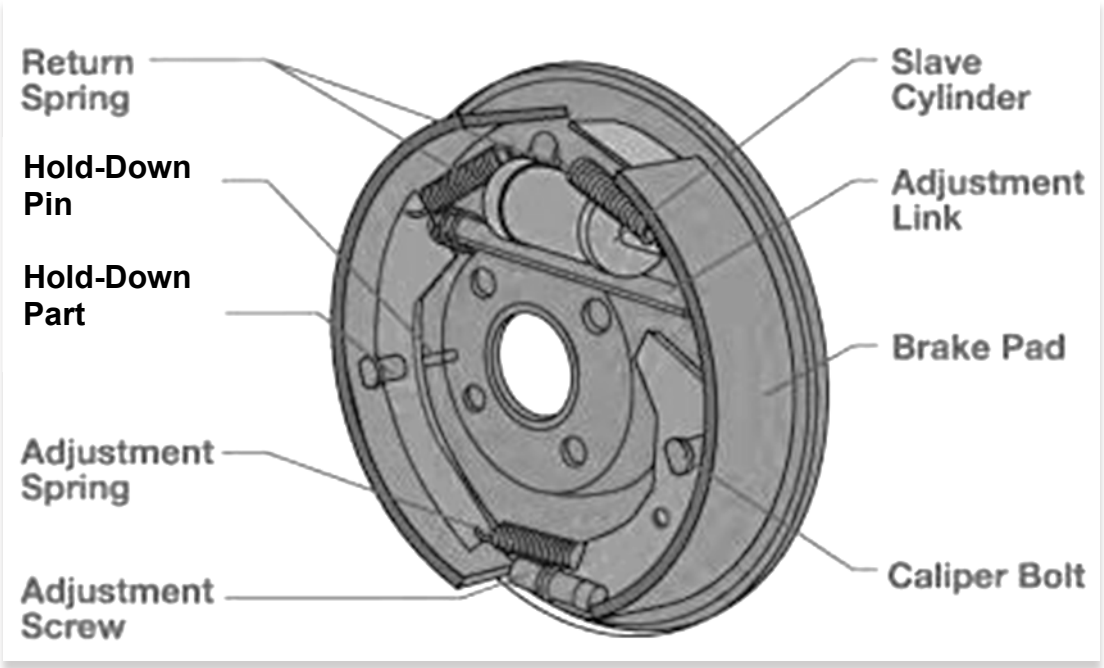


**[9]**

## QUESTION 7: ENGINEERING MATERIALS: MANUFACTURING PROCESS

7.1
- Pollution is reduced.
- A better quality steel is produced.
- The furnaces last longer.
- Furnace vessels have a bigger capacity than other furnaces. (4)

7.2 7.2.1




7.2.2

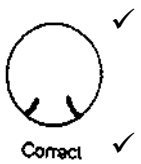


7.2.3




(2 × 3) (6)
**[10]**

## QUESTION 8: SAFETY PRECAUTIONS/DEVICES

8.1 8.1.1 No person working in close proximity to moving✓ or rotating machinery✓ shall wear or be allowed to wear loosely fitting clothing, jewellery, ornaments, a watch or key chains or straps.✓

8.1.2 Sufficient clear and unobstructed space should be provided and maintained✓ at every machine to enable work to be done without danger✓ to persons. A minimum of 2,25 square metres of clear floor space must be allowed for each person working in the room.✓

(2 x 3) (6)

8.2 8.2.1 In a factory employing more than six persons situated on any floor above or below ground level, a means of escape must be sufficiently provided for all persons and the plan and system of escape shall be as approved by the chief inspector. (1)

8.2.2 All doors serving as a means of exit should be kept clear and unlocked so as to allow easy access.
If the inspector requires it, any door serving as a means of exit has to be fitted to open outwards. (Any 1 × 1) (1)

8.2.3
- The staircase should be provided with a substantial handrail.
- The staircase should be adequately lit.
- Staircases should be constructed of non-flammable material.
- Staircases should be kept clear of any material or obstruction.

(Any 1 × 1) (1)

8.3 8.3.1 No one shall repair, adjust or work on apparatus unless the apparatus has been rendered dead and adequate measures have been taken to ensure that the apparatus remains electrically dead. (1)

8.3.2
- All electrical apparatus should be constructed according to a code of practice and approved by the chief inspector.
- A certificate should be issued by an inspecting authority showing the code to which the apparatus was built and tested. Such certificate should be approved by the chief inspector. (1)

**[11]**

## QUESTION 9: FLUID DRIVES

9.1
- They ensure an even, smooth coupling.
- They give an increase in torque.
- They reduce shock.
- They reduce wear. (4)

9.2
- A piston is shorter than the stroke while a plunger is longer than the stroke.
- A piston must have internal sealing inlaid on its circumference, while a plunger is externally sealed by a stuffing box. (2)

9.3
- The pump is of the positive displacement type requiring a vacuum on the inlet side.
- If the water is hot then steam instead of water fills the cylinder.
- The steam is gaseous and compressible. Therefore the pump fails to deliver. (3)

**[9]**

## QUESTION 10: ALLOY METALS

10.1 An alloy steel is a plain carbon steel to which one or more alloying elements have been added (1)

10.2
- This is when the properties of plain carbon steel are altered due to the addition of alloying elements
- causing reduction in grain size and an increase in strength. (2)

10.3
- This is when alloying elements modify the plain carbon steel
- in response to heat treatment like raising or lowering of the critical temperature. (2)

**[5]**

## QUESTION 11: HEAT TREATMENT OF CARBON STEELS

11.1 11.1.1
- Copper
- Tin
- Lead
- Zinc
- Antimony
- Aluminium (Any 2 x 1) (2)

11.1.2
- Cast iron
- Wrought iron
- Steel (Any 2 × 1) (2)

11.2
- This process consists of heating the steel to the required temperature, turning out of the furnace and allowing the part to cool down in the furnace.
- The parts are taken out of the furnace and covered with a nonconductive material
- such as charcoal, sand, lime or ashes. (3)

**[7]**

**TOTAL: 100**

Copyright reserved