higher education & training

Department:
Higher Education and Training
REPUBLIC OF SOUTH AFRICA

MARKING GUIDELINE

NATIONAL CERTIFICATE

APRIL EXAMINATION

LOGIC SYSTEMS N6

26 MARCH 2013

This marking guideline consists of 10 pages.

Copyright reserved

QUESTION 1

1.1 The **International Electrotechnical Commission (IEC)** is the world's leading organization that prepares and publishes **International Standards** for all electrical, electronic and related technologies. (5)

1.2 The **International Electrotechnical Commission (IEC)** is one of three global sister organisations (IEC, ISO, ITU) that develop **International Standards** for the world. Each member country has **one vote** and a say in each IEC International Standard. (5)

1.3 Millions of devices that contain electronics, and use or produce electricity, rely on **IEC International Standards** and **Conformity Assessment Systems**. By complying to IEC International Standards these millions of devices perform, fit and work safely together. South Africans designing or using Logic Systems (hardware or software) must conform to IEC Standards to run our own industries and to export to the world. The IEC Open International Standard IEC 61131 is of particular importance in this regard. (5)

1.4 **FIRST:**
Computer hardware **COSTS** continue to fall. (In terms of computing power per monetary unit).

SECOND:
Computer computational **POWER** has dramatically increased and continues to do so.

THIRD:
The development of **USER-FRIENDLY** and effective computer **PROGRAMS.**

FOURTH:
INTERACTIVITY with the computer via **KEYBOARD AND SCREEN** gives great advantages to a user. (Operational amplifier modifications must be done by changing physical components and output readouts are **not** user-friendly.)

FIFTH: All of the above advantages are combined in **SCADA**-systems. These are **USER-FRIENDLY** computerised software systems which reduce production downtime, increase efficiency and enhance the control of machinery and production facilities. For these reasons a **SCADA**-system should replace the outdated analogue equipment in the factory in Eastern Europe. (5)
[20]

Copyright reserved

QUESTION 2

2.1 Mathematical operations done before coding:

y = uu+ ut = u(u + t)

INSTRUCTION LOCATION/ INSTRUKSIE-ADRES	INSTRUCTION WORD/ INSTRUKSIEWOORD		DESCRIPTION/ BESKRYWING
	OP-CODE OP-KODE	ADDRESS/ ADRES	
AAAA	LOAD	F1B4	Load u
AAAB	ADDA	F1B3	Add t
AAAC	SUBT	FIB9	Subtract z
AAAD	BRAP	AAB5	Branch if Acc > 0
AAAE	ADDA	FIB9	Add z
AAAF	MULT	F1B4	Multiply by u
AAB0	SUBT	FIB9	Subtract z
AAB1	BRAP	AAB5	Branch if Acc > 0
AAB2	ADDA	F1B9	Add z
AAB3	STOR	F1B8	Store in y
AAB4	OUTP		Output
AAB5	HALT		Halt

NOTE that other programming sequences are accepted but you must fully document what you are doing. (10)

2.2 2.2.1 **The simplest mathematical form of the equation which this program segment solves.**

Y = r + r + r + r + r -- s — s — s + t + t + t + t

Y = 5r -- 3s + 4t (4)

2.2.2 **The language used to write this programming segment is:**

ASSEMBLER (which uses mnemonics like: ADDA, MULT and so on). (4)

2.2.3 **Showing ALL STEPS to calculate the decimal output of the program segment:**

Y = 5(F1B1) -- 3(F1B2) + 4(F1B3)
Y = 5r -- 3s + 4t
Y = 5(1100) -- 3(1000) + 4(900)
Y = 5500 -- 3000 + 3600
Y = 6100 (DECIMAL) (2)

[20]

Copyright reserved

QUESTION 3

3.1 STAIRCASE-RAMP VOLTAGE COMPARISON ANALOGUE-TO-DIGITAL CONVERTOR: BLOCK DIAGRAM

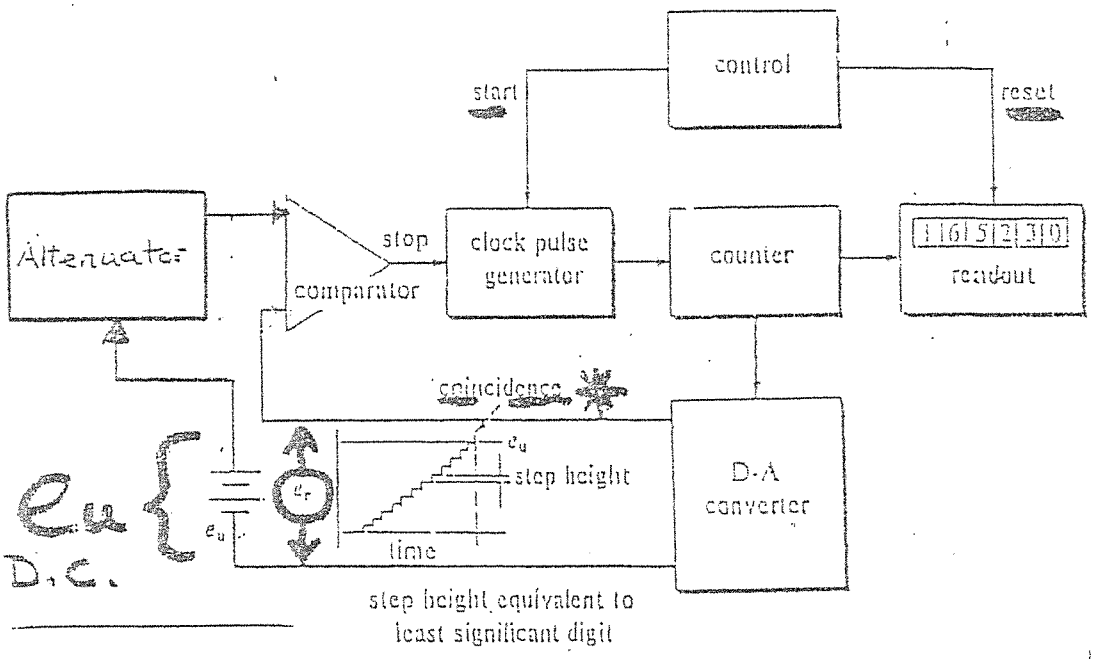

(6)

3.2 DISADVANTAGE OF THE STAIRCASE RAMP IN COMPARISON WITH THE SUCCESSIVE APPROXIMATION ANALOGUE-TO-DIGITAL CONVERTER:

The disadvantage of the staircase ramp in comparison to the successive approximation ADC is that it is **SLOWER.** The reason for this is as follows: The staircase ramp uses a counter (which increments the LSB) to count up to the input voltage. If input voltage is high then the count (and the upward moving staircase towards that value) can take a long time. The successive approximation ADC uses a **REGISTER** instead of a counter. This allows the **MSB (Most Significant Bit)** to be set and this saves the long time that a count can take. (6)

Copyright reserved

3.3 **BLOCK DIAGRAM OF THE SUCCESSIVE APPROXIMATION ADC**

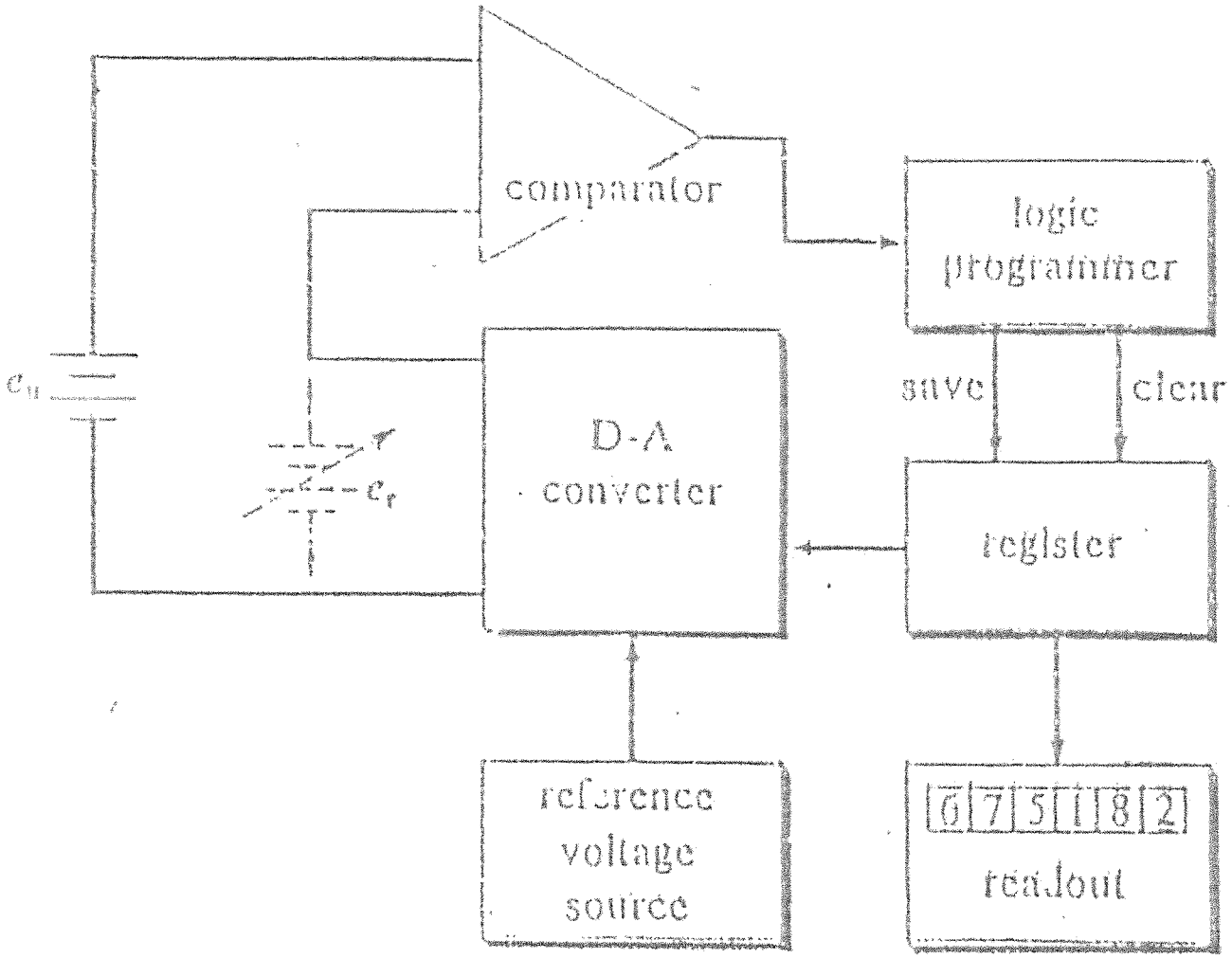

MARK ALLOCATION OF THE ABOVE QUESTION:===➔ (6)

3.4 The best known open-source operating system is **LINUX.** Google's **ANDROID** operating system (used for mobile telephones and computer tablets is also open-source. (2)
[20]

Copyright reserved

QUESTION 4

4.1 GLITCHES are high frequency voltage spikes (sometimes very large) which occur in the output of a digital-to-analogue converter for some changes in the input.

The glitch shown below which deforms the UP-COUNT output of a Digital-to-Analogue Converter (DAC) takes place because the time that the DAC components take to SWITCH **OFF** is quicker than their SWITCH-ON time. As is illustrated in the graph below this results in a deformation of the STEP waveform between count 3 and count 4. The voltage **SPIKES** suddenly tend towards 0 mV before recovering at switch-on.
Components generally take longer to switch on than to switch off. Semiconductor components need to energise charge carriers when they switch on and this takes time.

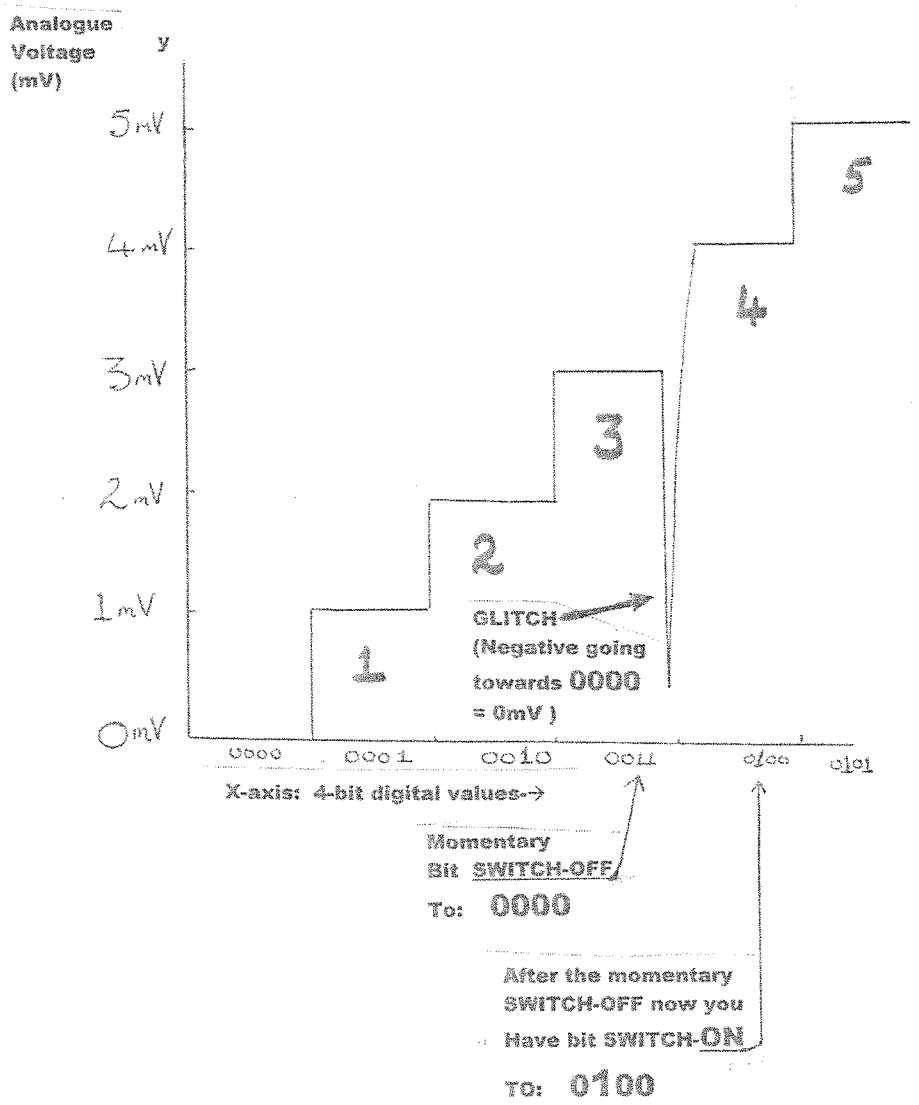

(6)

Copyright reserved

4.2 CONTROL OF TANK-LEVEL USING AN OP-AMP COMPARATOR

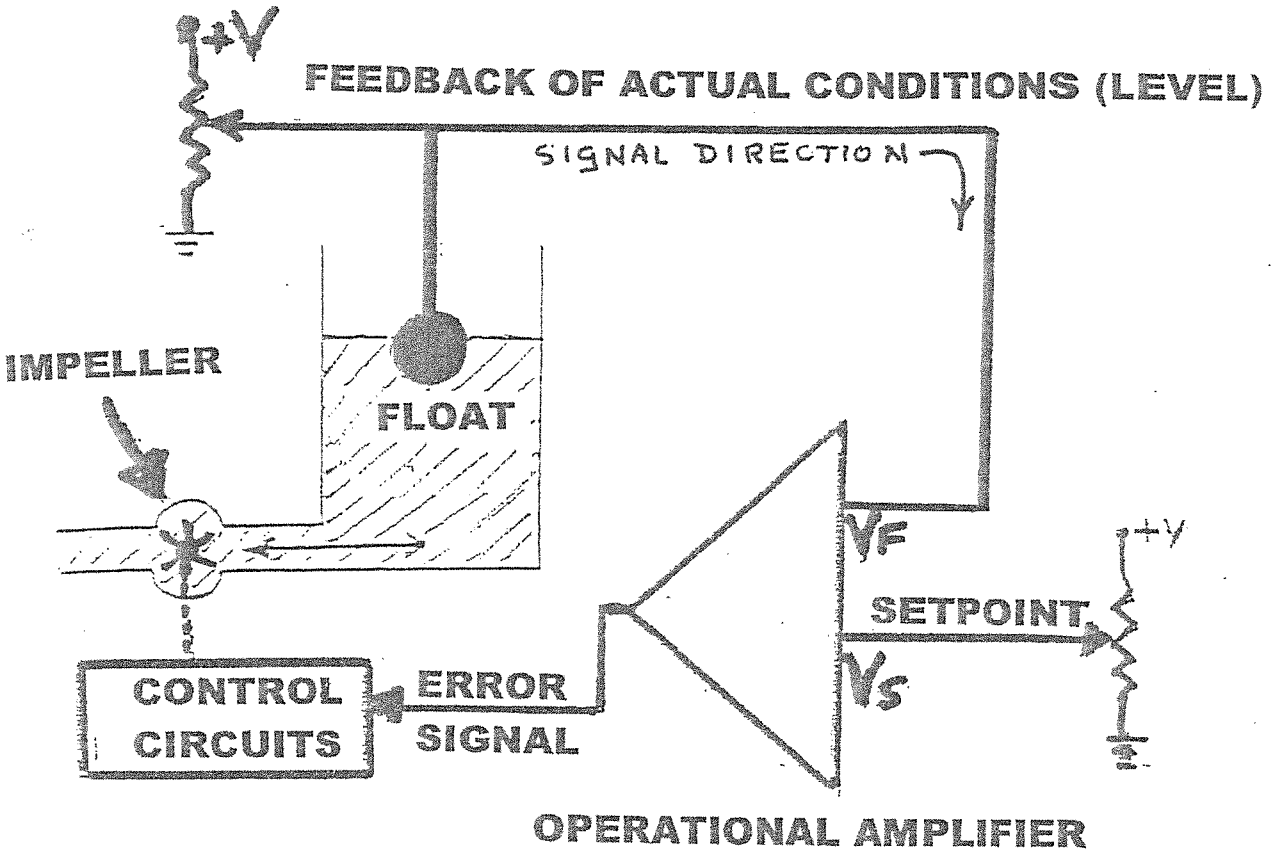

The above circuitry and process blocks show an analogue control system using an operational amplifier.

- When VF = S then the ERROR SIGNAL = 0 and the pump impeller does not move.
- When VF ≠ VS than the ERROR SIGNAL causes the bi-directional pump impeller to turn until set-point level is realised.

Mark allocation below:

Copyright reserved

4.3

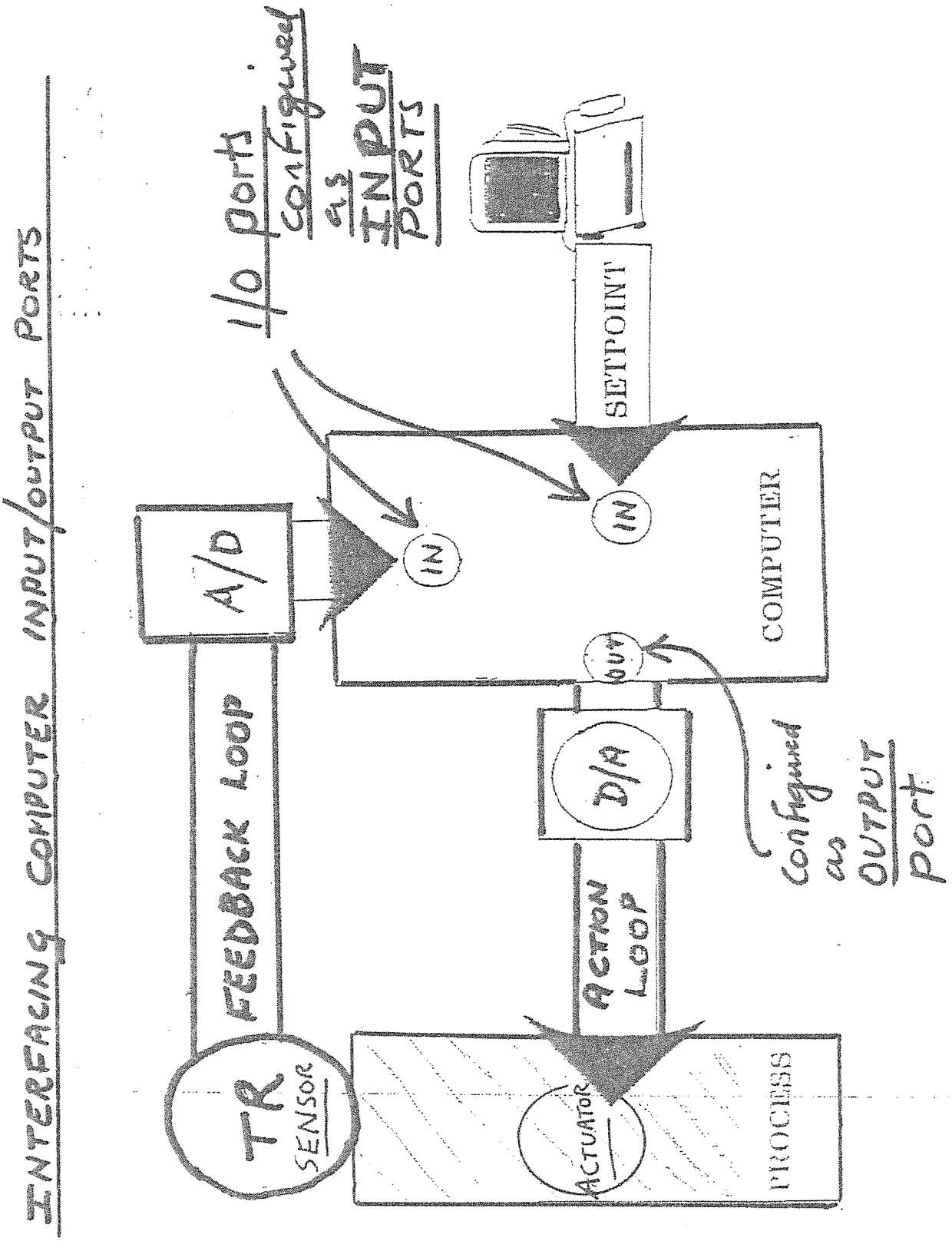
INTERFACING COMPUTER INPUT/OUTPUT PORTS
I/O ports configured as INPUT PORTS
SETPOINT
IN
IN
COMPUTER
A/D
FEEDBACK LOOP
TR
SENSOR
OUT
D/A
ACTION LOOP
Configured as OUTPUT port
ACTUATOR
PROCESS

(6)

QUESTION 4 (CONTINUED)

4.4 **P.L.C. TOGGLING FROM STATEMENT LIST TO DIAGRAM:**

When the Statement List Mnemonic 'OR' is displayed in Ladder Diagram the ladder diagram shows the inputs in **PARALLEL** (2)

[20]

QUESTION 5

5.1 FALSE
ASCII stands for American Standard Code for Information Interchange

5.2 FALSE
SCADA stands for Supervisory Control and Data Acquisition.
SCADA systems are computerised systems for monitoring and controlling machines and process and production facilities.

5.3 TRUE
SCADA systems are **software** systems which generally will run on any platform. This means the **software** will run on different types of computer.

5.4 TRUE
This is one very good reason for installing a SCADA system because it reduces production down-time. After installing a SCADA system call-outs of technicians on night-time stand-by decrease. The reason is that the operator can read what the fault is on the computer screen and often can fix the fault himself. In other words the SCADA system does the fault-finding. This reduces production down time because the machine is quickly got into production without the delay of a call-out.

5.5 TRUE
This has the advantage of curtailing fraud. The managers can see when the machine is being run to produce articles for 'private orders' by staff that have access to the machines and use them to produce articles illegally.

5.6 FALSE

The standard definition is: CPU = ALU + CONTROL UNIT and a **MICROPROCESSOR** is a CPU on one or a few Integrated Circuits.

5.7 FALSE
The operational amplifier is configured as a SUMMER.

5.8 TRUE
The gain of a non-inverting operational amplifier must always be greater than one.

Copyright reserved

5.9 FALSE
A PORT is a common interface. A BUS connects to INTERNAL PARTS of the computer so it cannot be described as an interface.

5.10 TRUE
There is no significant difference in stack use. [20]

TOTAL: 100

Copyright reserved