higher education & training

Department:
Higher Education and Training
REPUBLIC OF SOUTH AFRICA

MARKING GUIDELINE

NATIONAL CERTIFICATE

AUGUST EXAMINATION

LOGIC SYSTEMS N6

29 JULY 2014

This marking guideline consists of 11 pages.

Copyright reserved

QUESTION 1

1.1
- Ladder diagram (graphical)
- Function block diagram (graphical)
- Structured text (text)
- Instruction list (text)
- Sequential function chart (graphical) (5 x 2) (10)

1.2

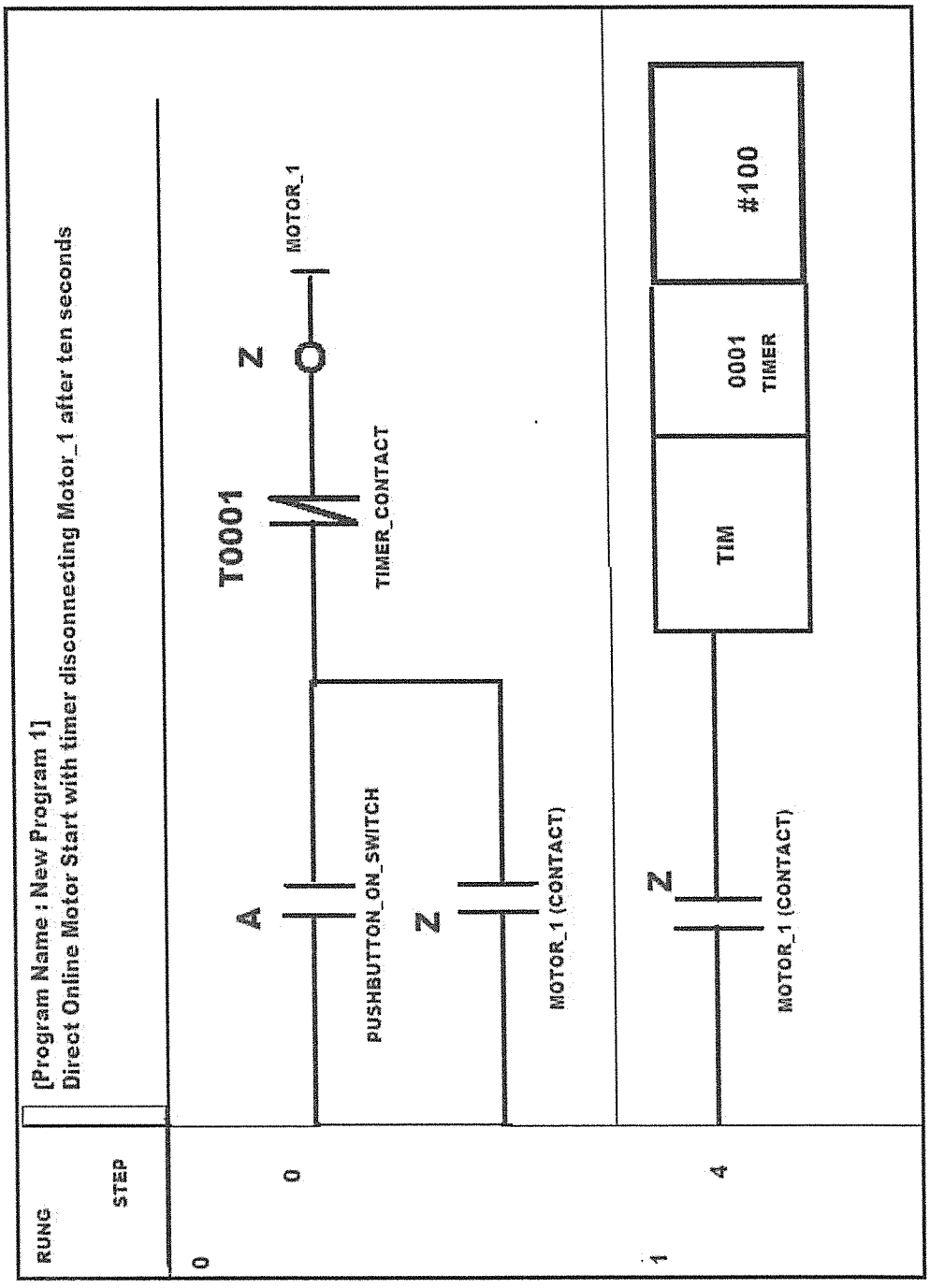

(10)

[20]

QUESTION 2

2.1

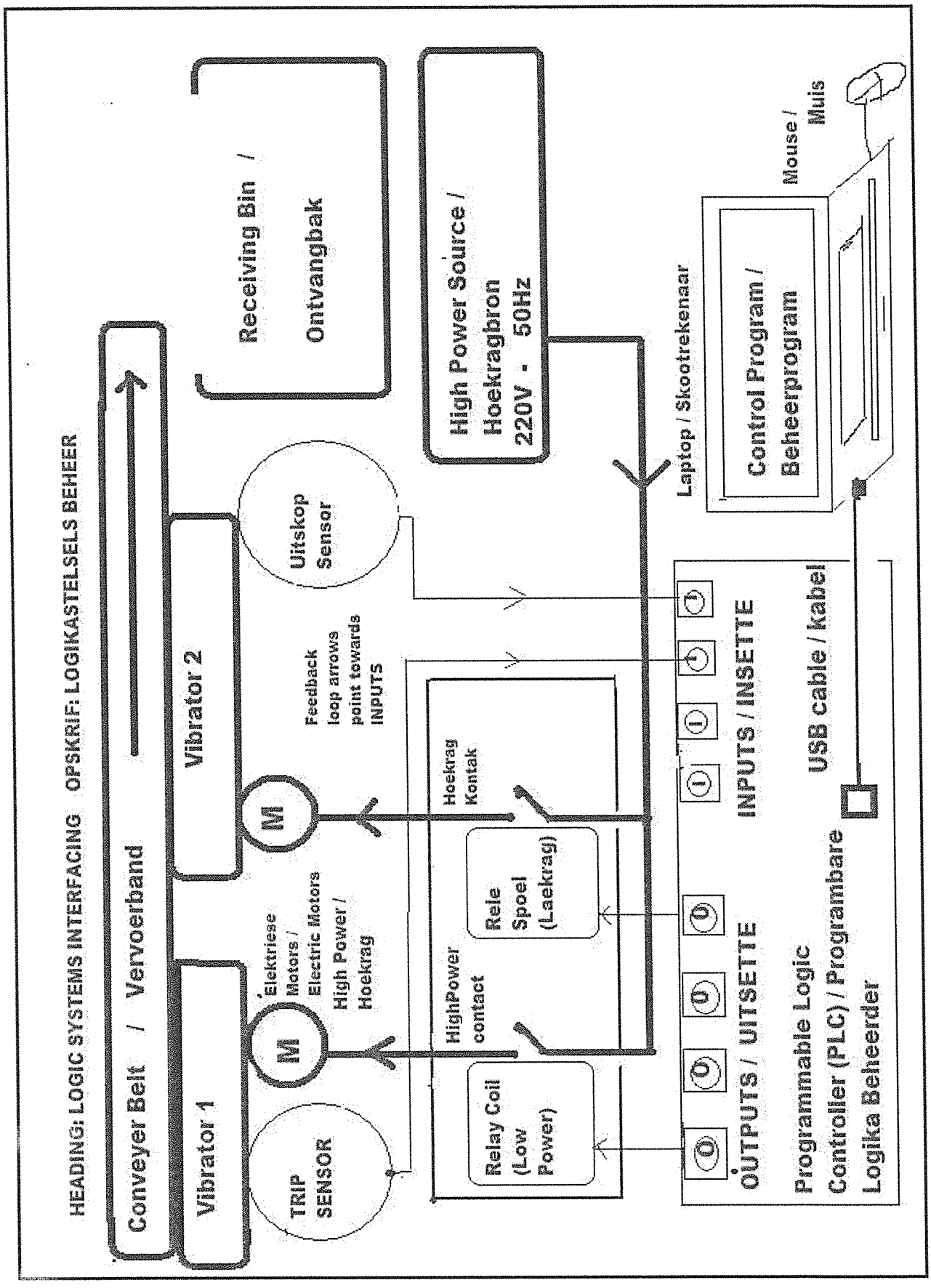

(10

2.2 **EXPLAINING WHAT IS MEANT BY 'OPEN SOURCE SOFTWARE'**

'Open **source** software' is sold with **source** code so that the customer can modify the program he has bought by altering the **source** code. √ √

TWO WELL-KNOWN EXAMPLES OF 'OPEN SOURCE SOFTWARE'

The best known example of open source software is the Linux operating system. Another well-known example is Google's Android software which is used as the operating system on mobile devices like smartphones and computer tablets. √ √

IS THE MICROSOFT OFFICE SUITE 'OPEN SOURCE SOFTWARE'

Microsoft and other big software companies do NOT allow the customer to tamper with their source code. When you buy a Microsoft product you buy a license to USE that software but NOT to change it. So Microsoft does not sell you their source code. In fact they have copyright on their software. It is NOT open source and they guard their intellectual property rights over their source code. √ (5)

2.3 **EXPLAIN WHAT IS MEANT BY AN 'OPEN INTERNATIONAL STANDARD'**

An **'Open International Standard'** is a standard published by the **International** Electrotechnical Commission (IEC). Such a standard has gone through the IEC processes so that key stakeholders (companies, industries and governments) have discussed and developed the standard. Every member country has **one vote** and therefore every member country has an input in each IEC standard. Millions of devices that contain electronics, and use or produce electricity, rely on IEC International Standards and Conformity Assessment Systems. By complying with IEC International Standards these millions of devices perform, fit and work safely together. South Africans designing or using Logic Systems (software or hardware) must conform to IEC Standards to run South Africa's industries and to export to the world. The IEC **Open International Standard IEC 61131-3** is of particular importance in this regard. √ √ √ (3)

2.4 **THE DIFFERENCE BETWEEN 'OPEN SOURCE SOFTWARE' AND AN 'OPEN INTERNATIONAL STANDARD'**

'Open source software' is something completely different from an 'Open International Standard'. People get confused between the two totally different concepts because the word 'open' appears in each. √ √ (2)

[20]

Copyright reserved

QUESTION 3

3.1

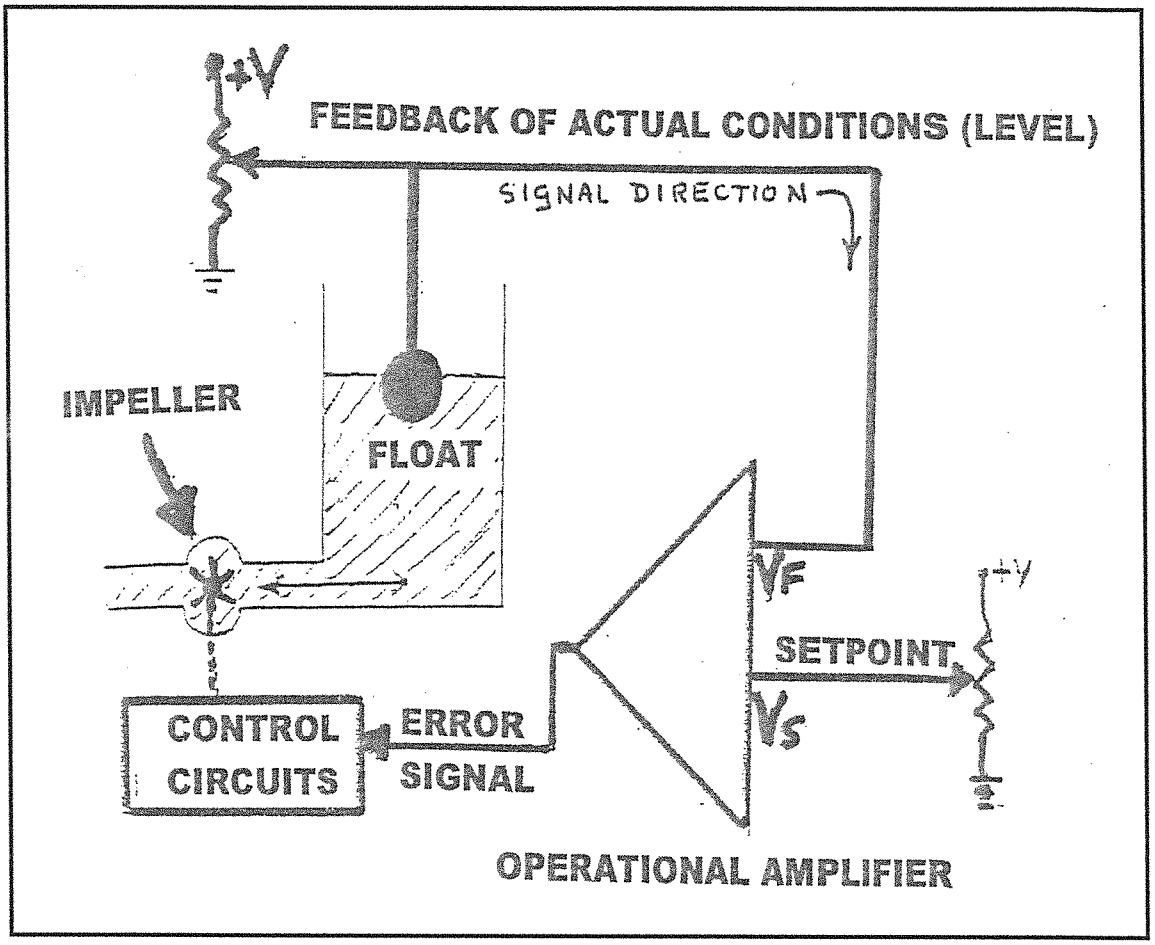

√ √ √ √ √ √ √ √

The above circuitry and process blocks show an analogue control system using an operational amplifier.

- When VF = VS then the ERROR SIGNAL = 0 and the pump impeller does not move.
- When VF ≠ VS than the ERROR SIGNAL causes the bi-directional pump impeller to turn until set point level is realised. (8)

Copyright reserved

3.2 **FIRST**
Computer hardware costs continue to fall (in terms of computing power per monetary unit). √

SECOND
Computer computational power has dramatically increased and continues to do so. √

THIRD
The development of user-friendly and effective computer programs √

FOURTH
Interactivity with the computer via keyboard and screen gives great advantages to a user. (Operational amplifier modifications must be done by changing physical components and output readouts are not user-friendly.) √ (4)

Copyright reserved

3.3

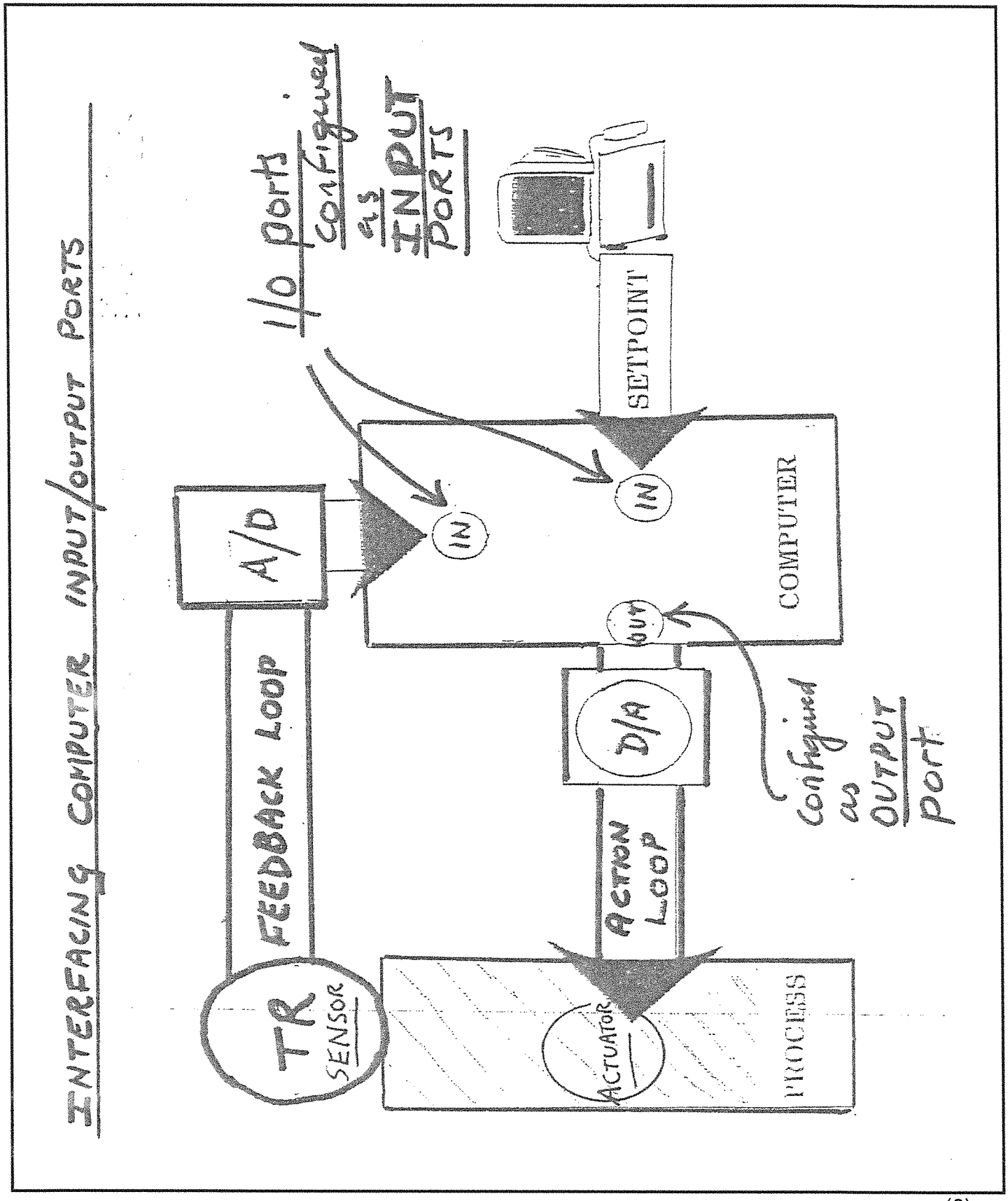
INTERFACING COMPUTER INPUT/OUTPUT PORTS
I/O ports configured as INPUT PORTS
SETPOINT
IN
IN
COMPUTER
A/D
FEEDBACK LOOP
TR
SENSOR
OUT
D/A
ACTION LOOP
ACTUATOR
PROCESS
Configured as OUTPUT Port

(8)

√ √ √ √ √ √ √ √ **[20]**

QUESTION 4

4.1 A debounce function prevents multiple micro-closure of switch contracts (caused by example by rubber dome bounce) from being translated into a string of a particular character when a particular key is pressed ONCE. (4)

4.2 **KEYBOARD CIRCUITRY USING A DIODE**

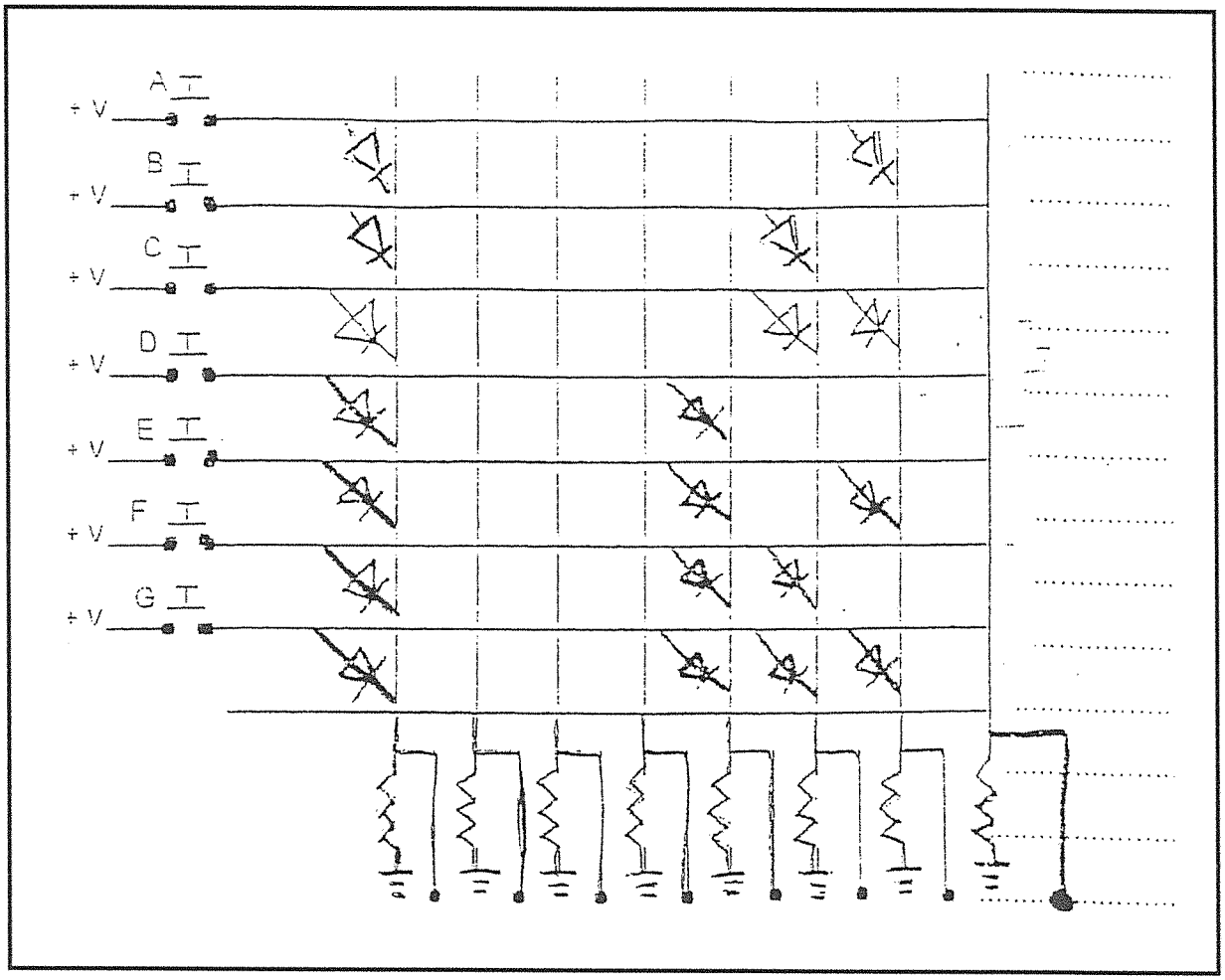

PULSE VOLTAGE GIVES 7-BIT ASCII OUTPUT

√ √ √ √ √ √ √

METHOD OF OPERATION

Conduction through the diodes of the diode matrix provides the necessary high logic conditions at the output. √ (8)

4.3 BLOCK DIAGRAM: DIGITAL MULTIMETER (DMM)

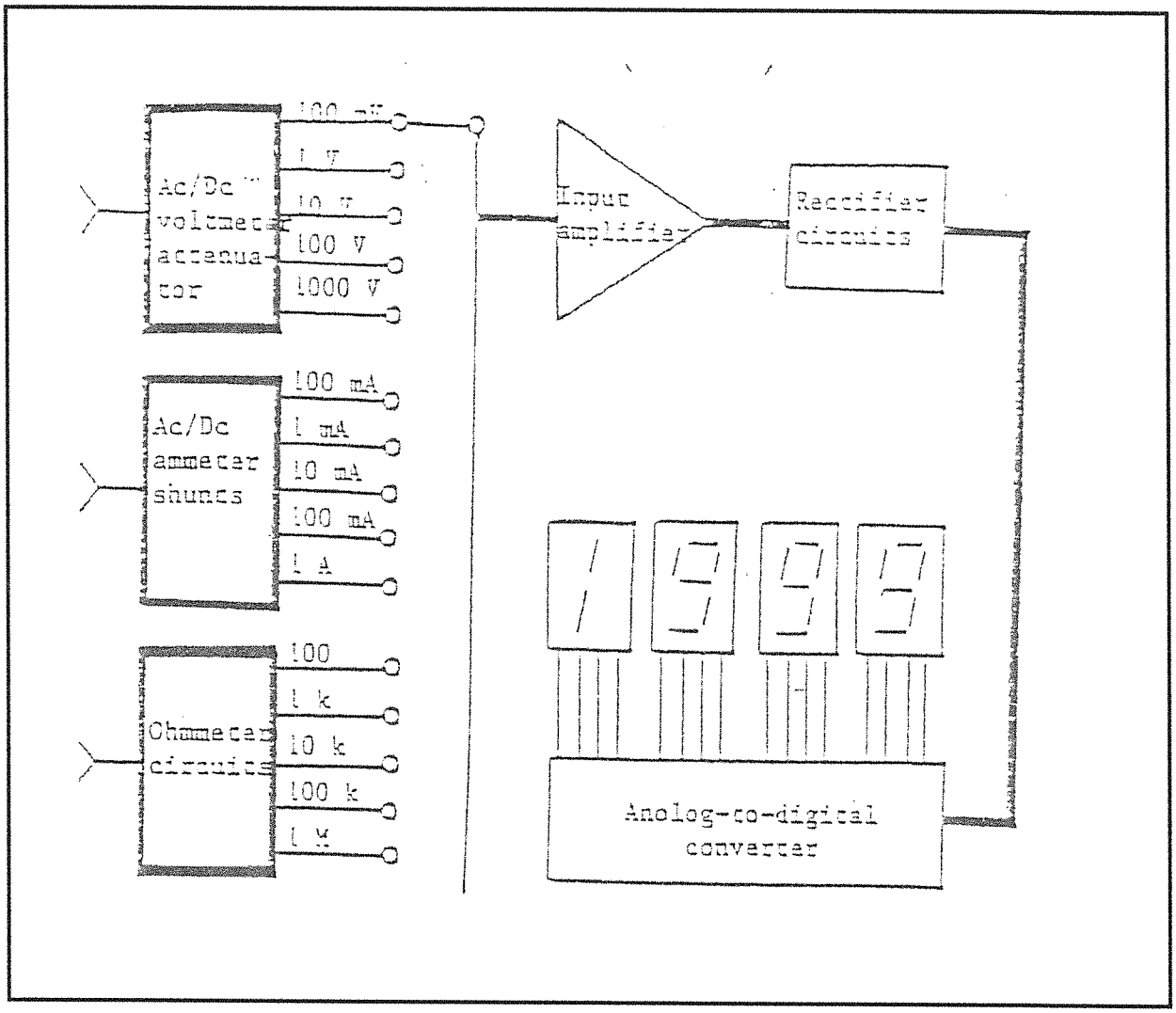

√ √ √ √

METHOD OF OPERATION OF THE THREE-INPUT CIRCUITS
VOLTAGE:
AC/DC measurement
Attenuator: signal reduction
Amplifier: signal (input) amplification √

CURRENT: Shunt circuitry and sensing circuitry √

RESISTANCE: Current supplier: Transformation and sensing √

METHOD OF OPERATION OF THE SYSTEM AS A WHOLE: After input selection and processing, further processing (including AD conversion) prepares the **digital display** for readout. √

(8)
[20]

QUESTION 5

5.1 **EXPLANATION OF WHY THE DATA BUS IS BIDIRECTIONAL**

The data is connected to the RAM which is a read-write memory. During a READ CYCLE data moves outwards along the data bus. During a WRITE CYCLE, DATA moves into the RAM. This means that the data bus must be bi-directional.

5.1.1 **MEMORY READ**

When data is extracted from the memory it goes into the MBR (Memory Buffer register) and then OUTWARDS along the data bus. For instance the LOAD command pulls data OUTWARDS along the data bus TO LOAD it into the accumulator. The memory address from which the data is extracted is specified in the MAR (Memory Address Register.)

5.1.2 **MEMORY WRITE**

During a WRITE operation data moves into the RAM, for instance the STORE instruction stores into the RAM whatever is in the accumulator. The STORE instruction is also 'memory referenced'. However the memory address specified in the MAR is the address into which data is written. Data flows in the opposite direction to that which takes place during LOAD. This is the reason for the bidirectional data bus and the tristate buffering necessary to make it work.

(2 x 1) (2)

5.2 Mathematical operations done before coding: no operations necessary here.

√ √

INSTRUCTION LOCATION	INSTRUCTION WORD		DESCRIPTION
	OP-CODE	ADDRESS	
CAAA	LOAD	F1B4	Load u
CAAB	ADDA	F1B3	Add t
CAAC	BRAP	CAB1	Branch if Acc > 0
CAAD	MULT	F1B4	Multiply by u
CAAE	BRAP	CAB1	Branch if Acc > 0
CAAF	STOR	F1B9	Store in z
CAB0	OUTP		Output
CAB1	HALT		Halt

√ √ √ √ √ √

NOTE: Other programming sequences are accepted but candidate must clearly show what he/she has done. (8)

Copyright reserved

5.3
- Linux (Operating system)
- APACHE (Web server)
- Android (Operating system)
- osCommerce (E-commerce)
- Mozilla Firefox (Internet browser)
- PNG (Portable Network Graphics)
- Asterisk (PBX - Private Branch Exchange)

(Any 5 x 2) (10)
[20]

TOTAL: 100

Copyright reserved