higher education & training

Department:
Higher Education and Training
REPUBLIC OF SOUTH AFRICA

MARKING GUIDELINE

NATIONAL CERTIFICATE

LOGIC SYSTEMS N6

29 July 2021

This marking guideline consists of 7 pages.

Copyright reserved

1.1 Static MOS RAM cell

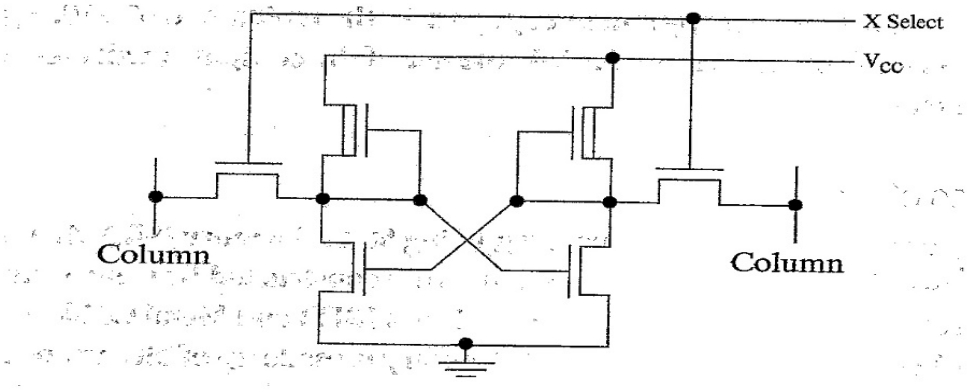

(5)

Dynamic MOS RAM cell

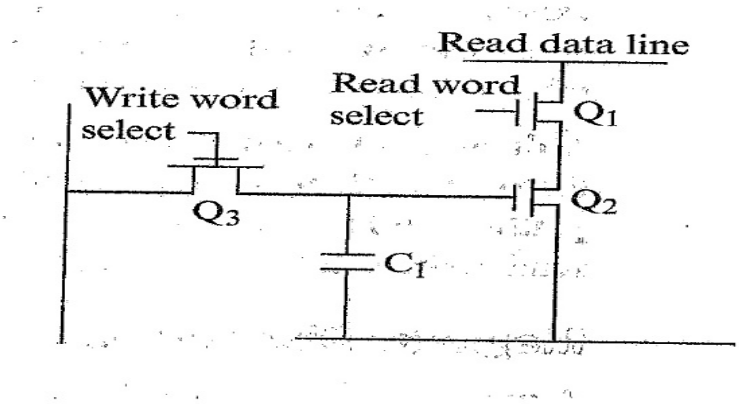

OR

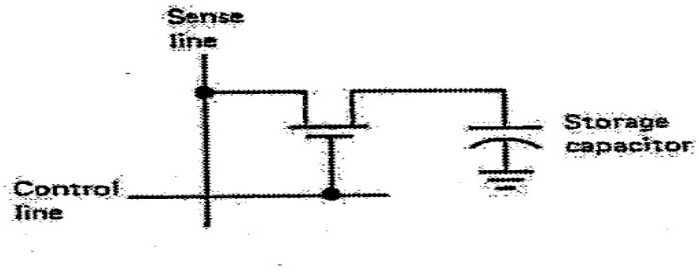

(Accept any other correct circuit) (5)

1.2
- Digital processing is more accurate.
- Software can be used to change the processing instead of changing hardware.
- Software makes system more flexible and adaptable.
- Software can detect errors and correct errors in processing.
- The process can be monitored and recorded.
- Cost of digital processing continue to fall. (Any 5 × 2) (10)

[20]

QUESTION 2

2.1 False – IR holds OP-CODE/Data is stored in RAM

2.2 False – The PROGRAM COUNTER holds the address of the next instruction / Data stored in RAM.

2.3 True – All solid state storage/No moving parts.

2.4 False – Only dynamic RAM needs to be refreshed.

2.5 False – It offers extremely large storage capacity.

2.6 False – It has a very large memory capacity.

2.7 False – Uses less hardware but drives are not buffered.

2.8 False – RS-232 is old technology and slower than USB interfacing.

2.9 True – One memory (usually EPROM or EEPROM) used to store instructions whilst other memory (RAM) is used for storing data.

2.10 False – Printer is an output device and the keyboard is an input device.

(10 × 2) **[20]**

QUESTION 3

3.1 The compiler translates the source code into object code, which then becomes the executable file of the program (4)

3.2 Address bus
Control bus
Data bus

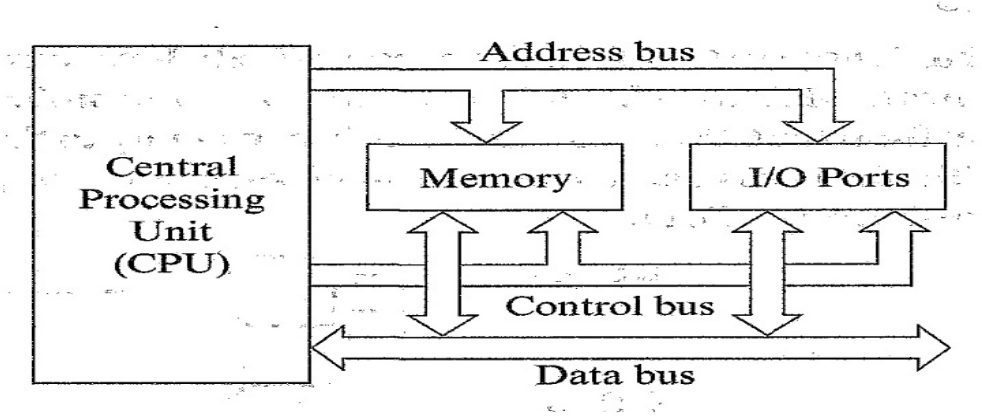

Accept any similar correct diagram (8)

3.3

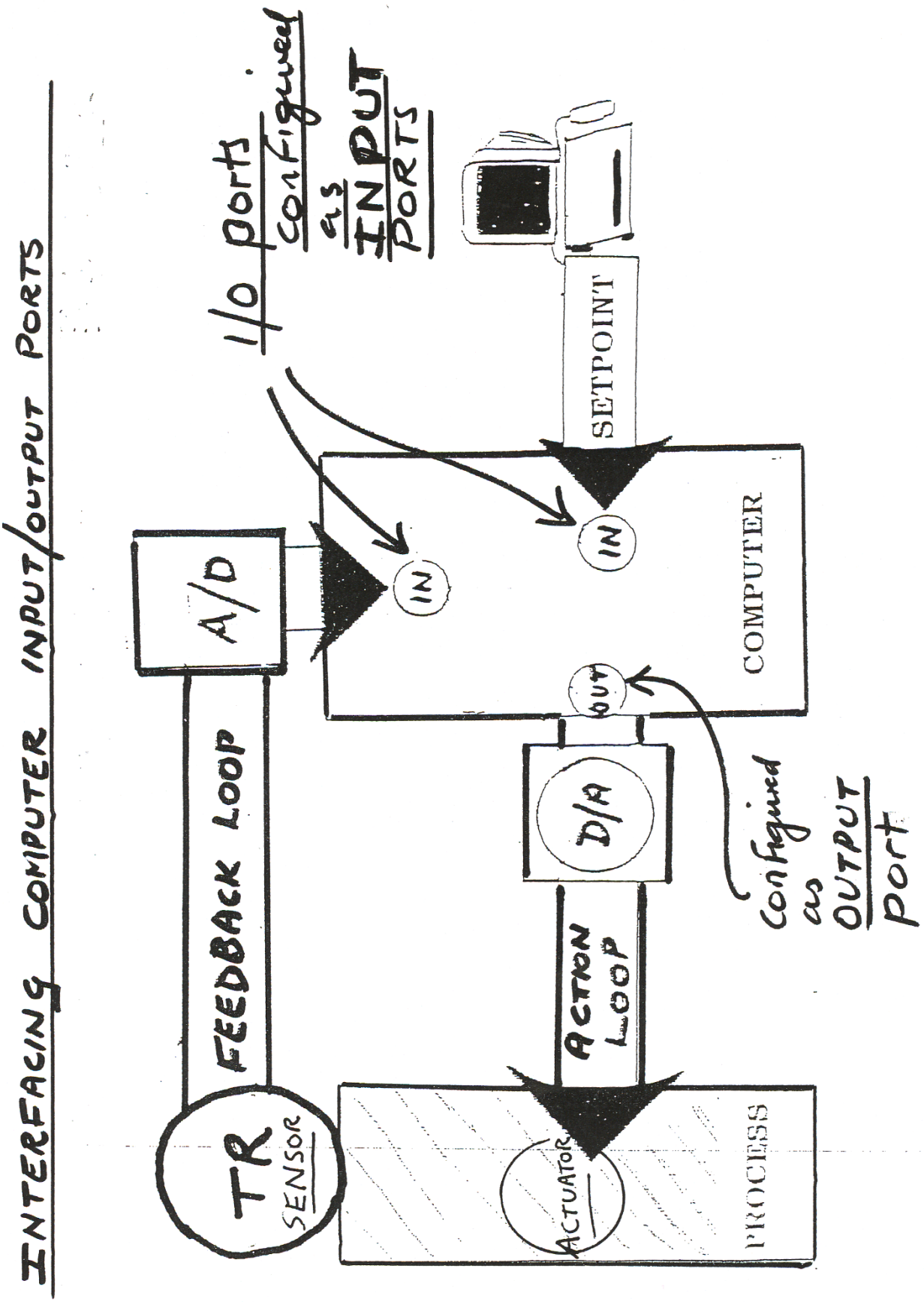
INTERFACING COMPUTER INPUT/OUTPUT PORTS
I/O ports configured as INPUT PORTS
SETPOINT
IN
IN
COMPUTER
OUT
A/D
D/A
FEEDBACK LOOP
ACTION LOOP
TR
SENSOR
ACTUATOR
PROCESS
Configured as OUTPUT Port

(8)
[20]

QUESTION 4

4.1 Keyboard circuitry using a diode
Matrix to produce ASCII codes

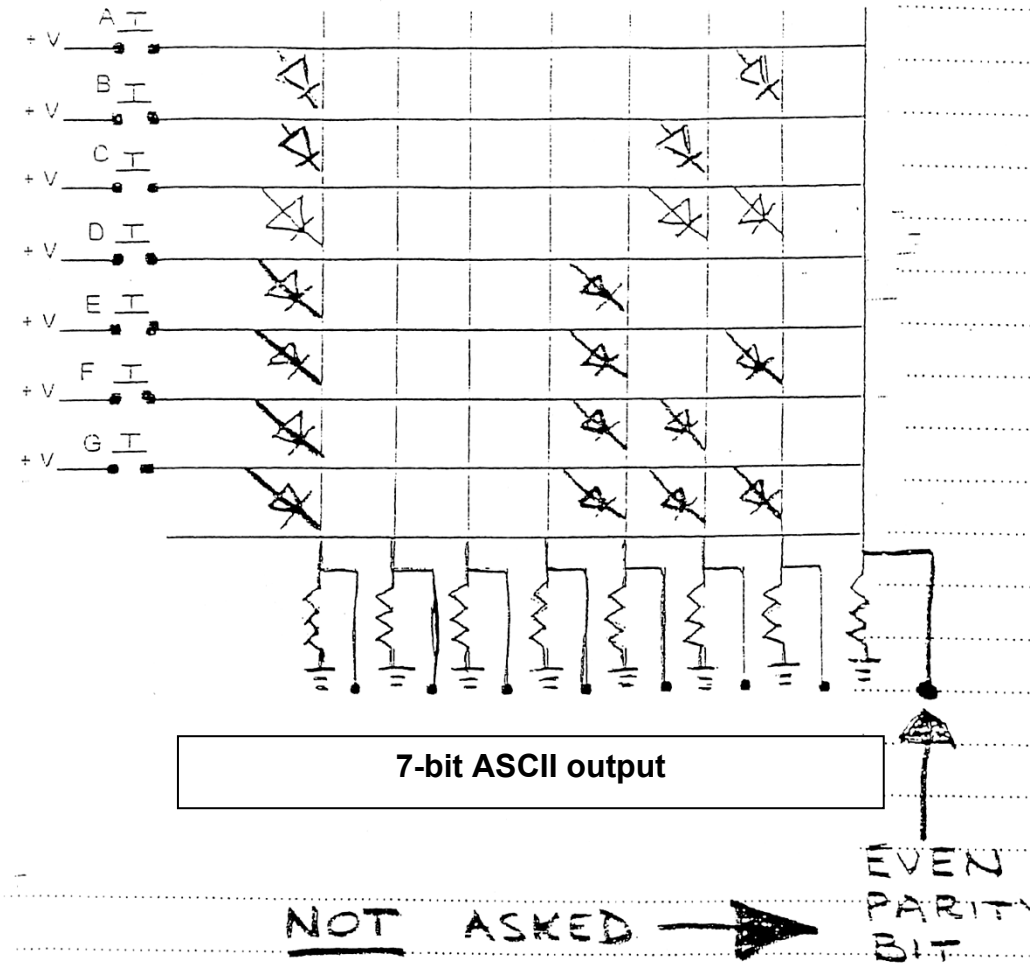

Diode matrix to produce all ASCII codes

Method of operation:
Conduction through the selected diodes of the diode matrix provides the necessary high logic conditions at the output. (8)

4.2

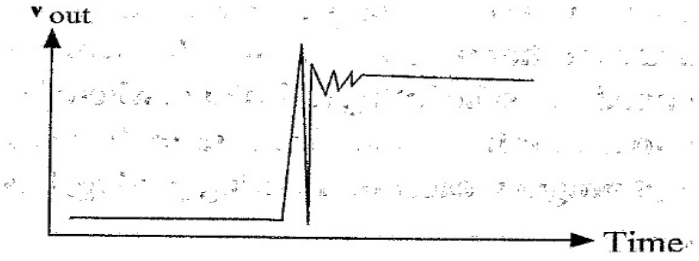

Advantage:

A de-bounce function prevents multiple micro-closure of switch contacts (caused for example by rubber dome bounce) from being translated into a string of a particular character when a particular key is pressed on (4)

4.3 Parallel ADC

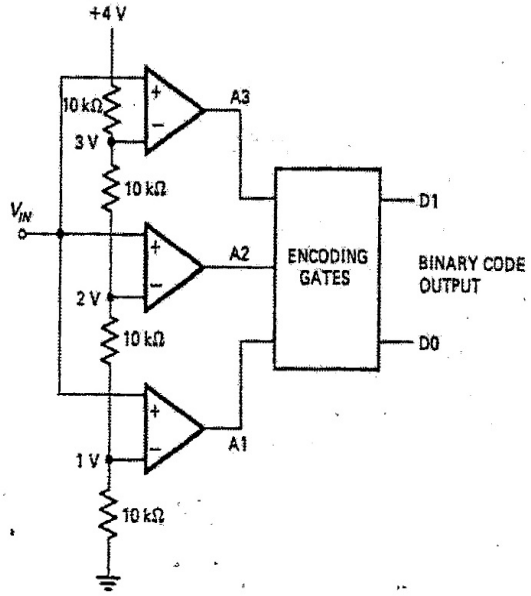

V_{IN} (Volts)	Comparator Outputs			Binary Output	
	A1	A2	A3	D1	D0
0 to 1	0	0	0	0	0
1 to 2	1	0	0	0	1
2 to 3	1	1	0	1	0
3 to 4	1	1	1	1	1

(b)

(8)
[20]

QUESTION 5

5.1 r = u(s + x + y)

INSTRUCTION LOCATION	INSTRUCTION WORD		DESCRIPTION
	OP-CODE	ADDRESS	
EBAA	LOAD	F1B2	Load s
EBAB	ADDA	F1B7	Add x
EBAC	BRAN	EBB3	Branch if Acc < 0
EBAD	ADDA	F1B8	Add y
EBAE	BRAN	EBB3	Branch if Acc < 0
EBAF	MULT	F1B4	Multiply by u
EBB0	BRAN	EBB3	Branch if Acc < 0
EBB1	STOR	F1B1	Store in r
EBB2	OUTP		Output
EBB3	HALT		Halt

NOTE: Also accept other correct programming sequences. (10)

5.2
- Linux (Operating System)
- APACHE (Web Server)
- Android (Operating System)
- OS Commerce (E-commerce)
- Mozilla Firefox (Internet Browser)
- PNG (Portable Network Graphics)
- Asterisk (PBX – Private Branch Exchange) (Any 5 × 2) (10)

[20]

TOTAL: 100

Copyright reserved