higher education & training

Department:
Higher Education and Training
REPUBLIC OF SOUTH AFRICA

MARKING GUIDELINE

NATIONAL CERTIFICATE

LOGIC SYSTEMS N6

27 JULY 2018

This marking guideline consists of 8 pages.

Copyright reserved

QUESTION 1

1.1 False
The series digital to analogue converter works basically as an INTEGRATOR. It has a capacitor in the feedback loop.

1.2 True
A PLC can be programmed on your laptop using ladder diagrams. However when you compile your ladder program, that program is made up of binary zeros and ones. When you DOWNLOAD that program (from your laptop to the PLC) it is then run by the PLC microprocessor.

1.3 True
When you create a ladder diagram program you are looking at the screen of your computer (usually a laptop plasma screen). That laptop has a microprocessor inside it. (Often this is an INTEL microprocessor.) Once you have compiled and DOWNLOADED your program then it is the PLC microprocessor which will be ready to run your program.

1.4 True
The Schmitt-trigger output waveform is a PULSE-TYPE waveform. At the hysteresis points it switches either on or off to create the on/off waveforms.

1.5 True
IR holds the whole instruction word: op-code PLUS operand address.

1.6 False
The PROGRAM COUNTER holds the address of the next instruction.

1.7 False
The Control Unit and access to memory and all CPU operations are synchronised by the system clock oscillator which is rated in gigahertz.

1.8 False
Relay logic is outdated. Relays might still be used to switch POWER but logic functions are accomplished using integrated circuits.

1.9 False
The interface is a PORT

1.10 False
MOST interfacing involves ACD or DAC. However an actuator like a stepper motor requires no DAC and some angular displacement transducers give a digital signal direct to the computer.

(10 × 2) **[20]**

QUESTION 2

2.1 2.1.1 Summing-amplifier:

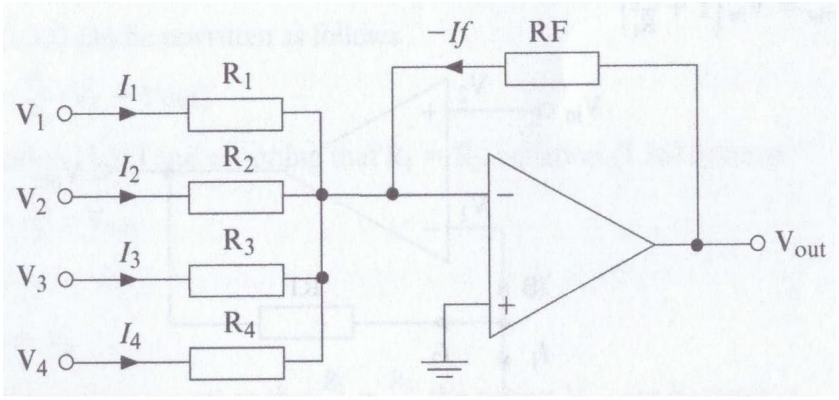

(6)

2.1.2 Calculation:

Vout = - (V1 + V2 + V3 + V4)✓

= - (+0,010 – 0,025 + 0,300 – 0,100)✓

= - 0,215v✓

= - 185 m V✓ (4)

2.2 2.2.1 Differentiator:

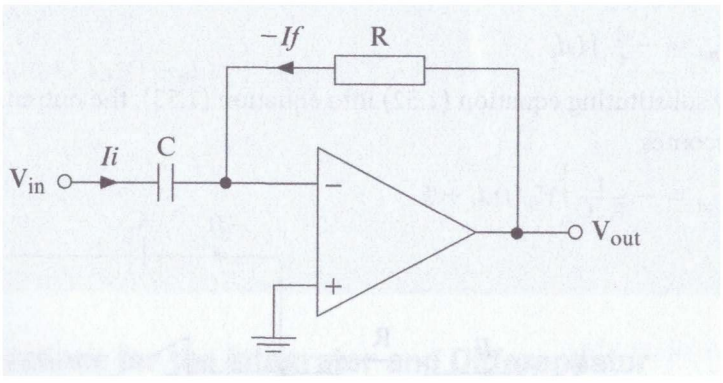

2.2.2 Integrator:

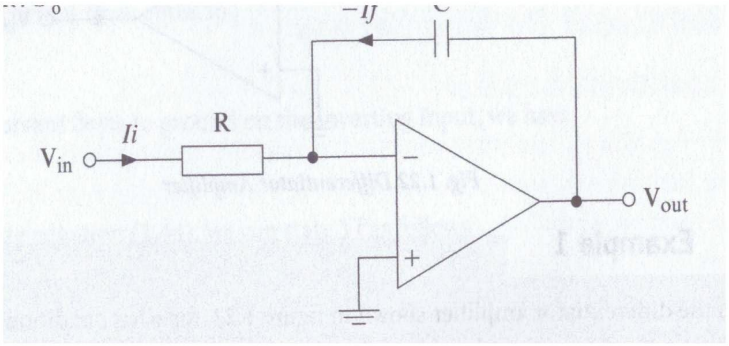

(2 × 5) (10)
[20]

QUESTION 3

3.1
- The output of the inverting operational amplifier must be inverted.✓
- In this circuit the input voltage is positive and the output voltage must be✓ inverted to negative. +6 volt is measured at the output for a +1Volt input.✓
- This is wrong.✓
- Therefore the operational amplifier is faulty and must be replaced.✓ (5)

3.2 Dual-Slope A/D converter

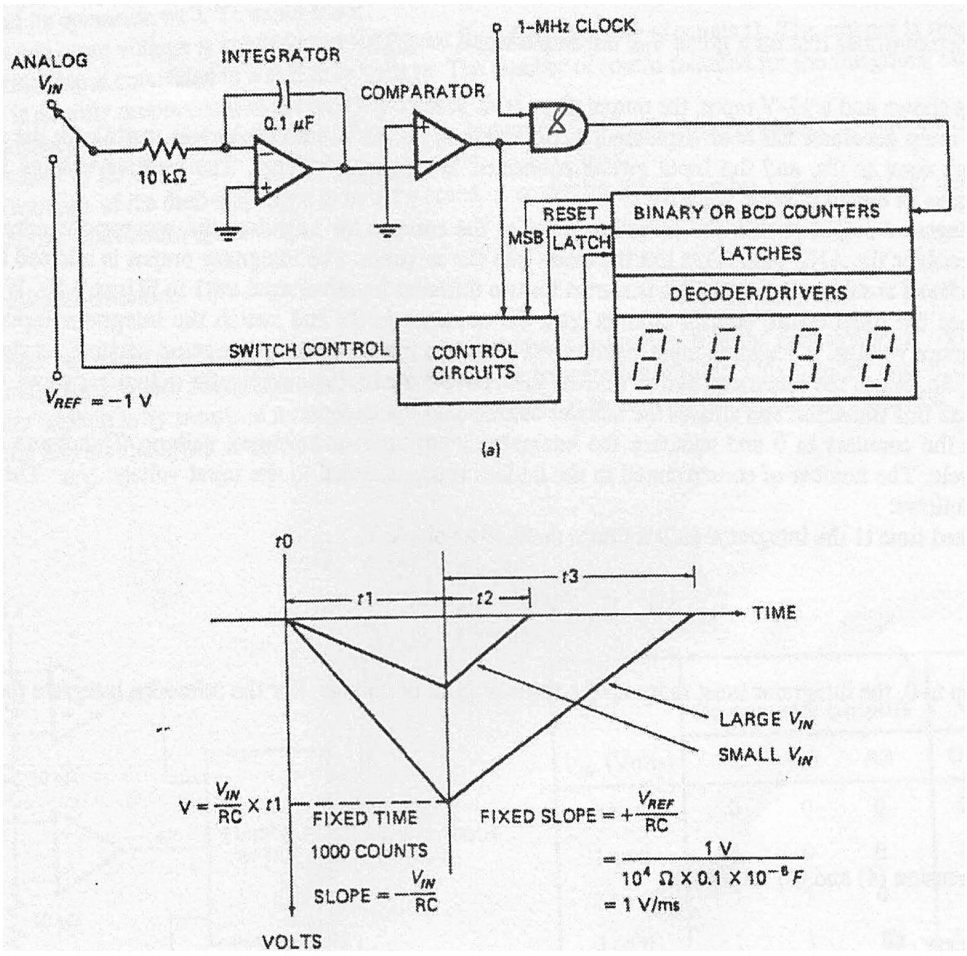

(8)

3.3 $13V = 1101_{BINARY}$

	8	4	2	1		
Start	1	0	0	0	= 08V	Smaller than input voltage. Set next digit.
	1	1	0	0	= 12V	Smaller than input voltage. Set next digit.
	1	1	1	0	= 14V	Bigger than input voltage. Clear and set next digit.
	1	1	0	1	= 13V	Stop and display count as 13 Volt on display.

(7)

[20]

QUESTION 4

4.1 4.1.1

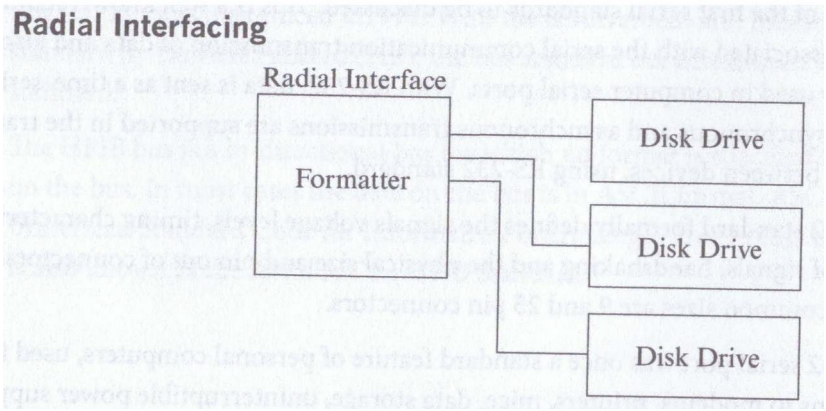

4.1.2

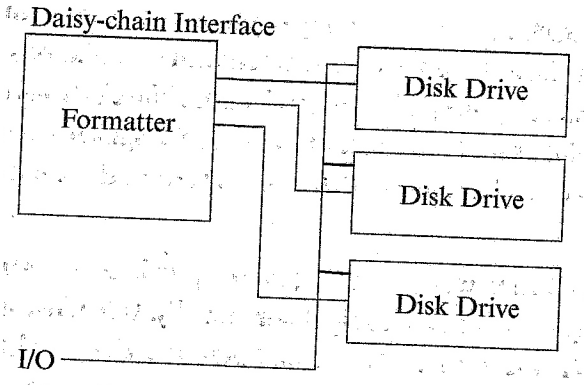

(2 × 4) (8)

4.2 Mathematical operations done before coding:

z = v(t - u)

INSTRUCTION KOCATION/ INSTRUKSIE-ADRES	INSTRUCTION WORD/ INSTRUKSIEWOORD		DESCRIPTION/ BESKRYWING
	OP-CODE OP-KODE	ADDRESS/ ADRES	
BAAA	LOAD	F1B3	Load t
BAAB	SUBT	F1B4	Subtract u
BAAC	BRAN	BAB1	Branch if Acc < C
BAAD	MULT	F1B5	Multiply by v
BAAE	BRAN	BAB1	Branch if Acc < O
BAAF	STOR	F1B9	Store in z
BAB0	OUTP		Output
BAB1	HALT		Halt

NOTE that other programming sequences are accepted. (8)

Copyright reserved

4.3 RS 232-Protocol:

Serial communication.

Data is sent as a time-series of bits.
Both synchronous and asynchronous transmission/reception supported.
RS 232-standard defines signal voltage levels, timing characteristics and handshaking and 9 or 25 pin connectors. (4)
[20]

QUESTION5

5.1 VON NEUMANN ARCHITECTURE:
Has only one memory – a RAM – so that the RAM is accessed TWICE during each machine cycle.
During the FETCH routine the ram is accessed to fetch the instructions routine into INSTRUCTIONS REGISTER.
During the EXECUTE routine the RAM is accessed to get the operand out of the operand address.

HARVARD ARCHITECTURE:
Has two separate memories.
RAM and ROM
One memory is usually EPROM or EEPROM which stores the program instructions permanently.
The RAM stores only the operands.
The FETCH and the EXECUTE routines will access two separate memories. (10)

5.2

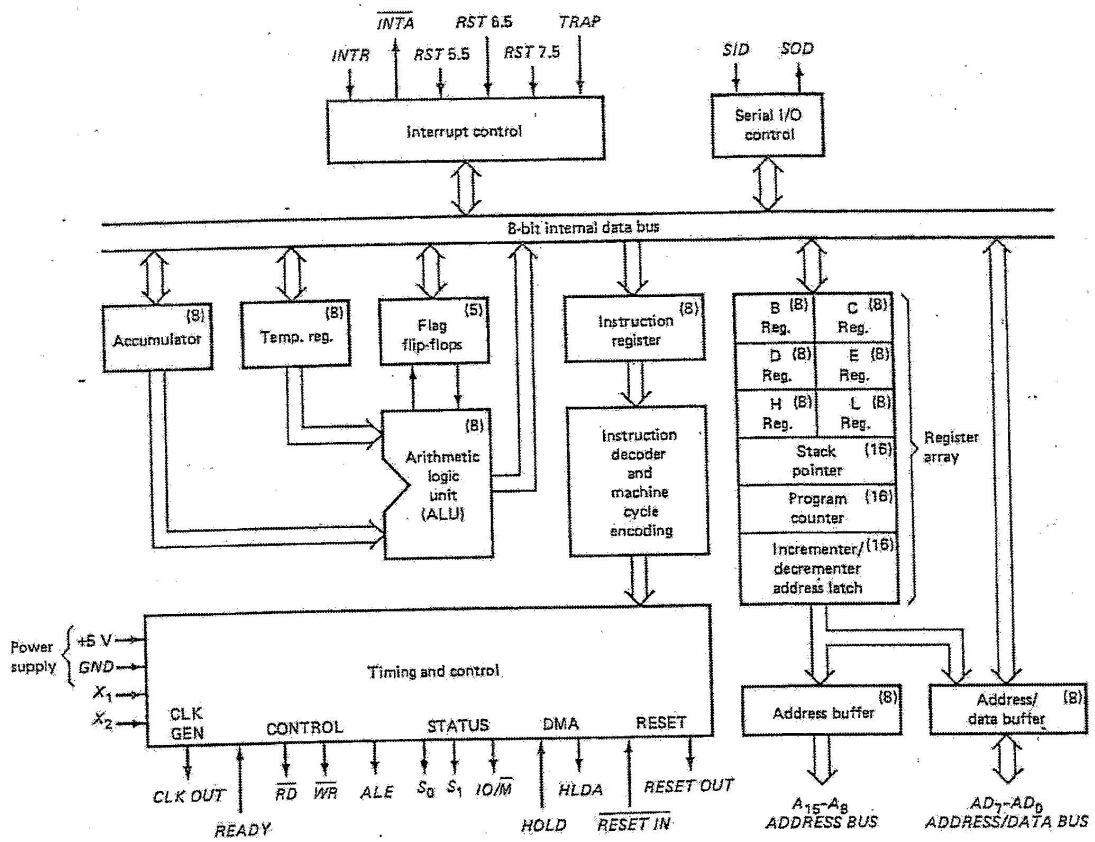

✓ ✓ ✓ ✓ ✓ ✓ ✓ ✓ ✓

INTEL 8085 MICRO PROCESSOR (10)
[20]

TOTAL: 100

Copyright reserved