higher education & training

Department:
Higher Education and Training
REPUBLIC OF SOUTH AFRICA

MARKING GUIDELINE

NATIONAL CERTIFICATE

LOGIC SYSTEMS N6

7 April 2021

This marking guideline consists of 7 pages.

Copyright reserved

QUESTION 1

1.1 False.
It uses transistors.

1.2 False.
Static RAM consumes much more power than dynamic RAM.

1.3 True
- It is portable.
- It can be used on different computers. (Any 1 × 1)

1.4 False.
It is an interface to and from external devices.

1.5 True.
The operational amplifier is configured as an integrator.

1.6 False.
It is an input device to the computer.

1.7 False.
It provides a square-wave output.

1.8 True.
2^8 = 256 addresses.

1.9 True.
The assembler converts the mnemonics into machine language.

1.10 False
- Both are serviced the same way.
- There is no difference. (Any 1 × 1)

(10 × 2) **[20]**

QUESTION 2

2.1

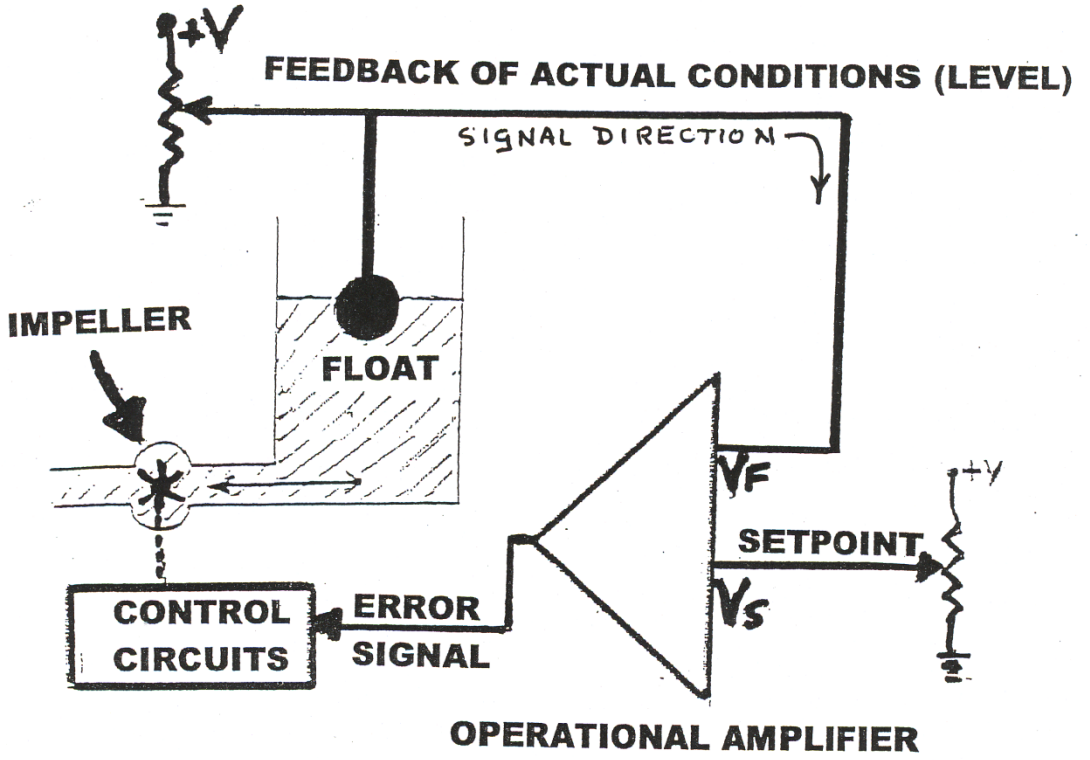

The above circuitry and process blocks show an analogue control system using an operational amplifier.

The operator sets the desired level on the set point potentiometer. This places a voltage Vs on the comparator amplifier.

When VF = S then the ERROR SIGNAL = 0 and the pump impeller does not move. When VF ≠ VS than the ERROR SIGNAL triggers the control circuit which causes the bidirectional pump to be activated. (10)

2.2

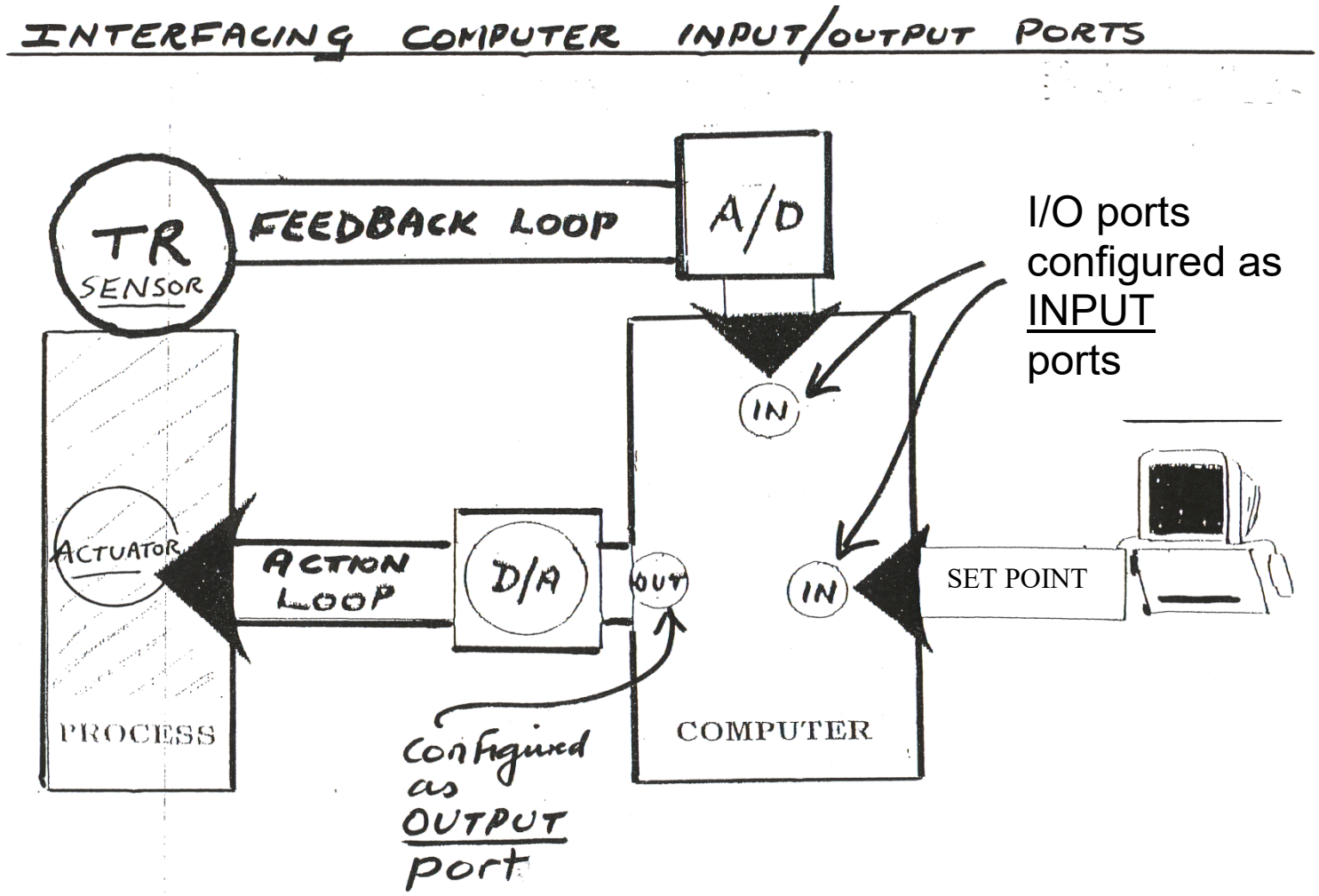

(10)
[20]

Copyright reserved

QUESTION 3

3.1
- Address bus
- Data bus
- Control bus

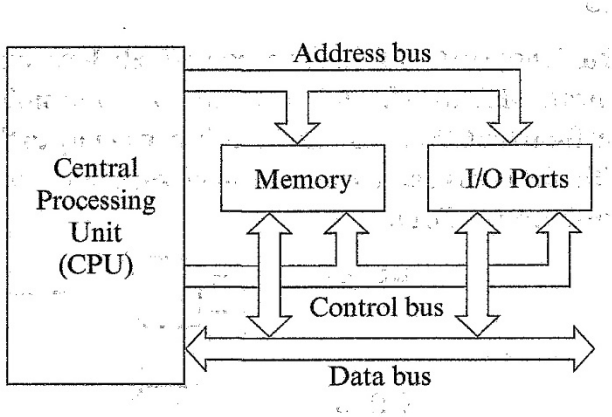

(8)

3.2 3.2.1 **Radial interfacing**

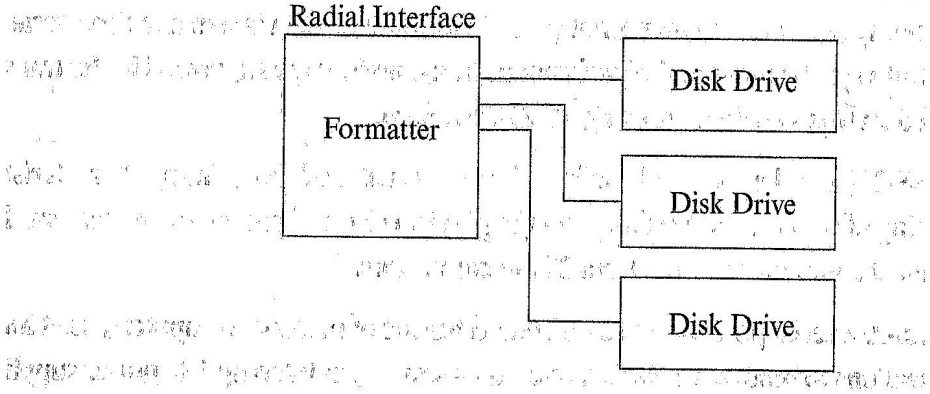

(5)

3.2.2 **Daisy chain interfacing**

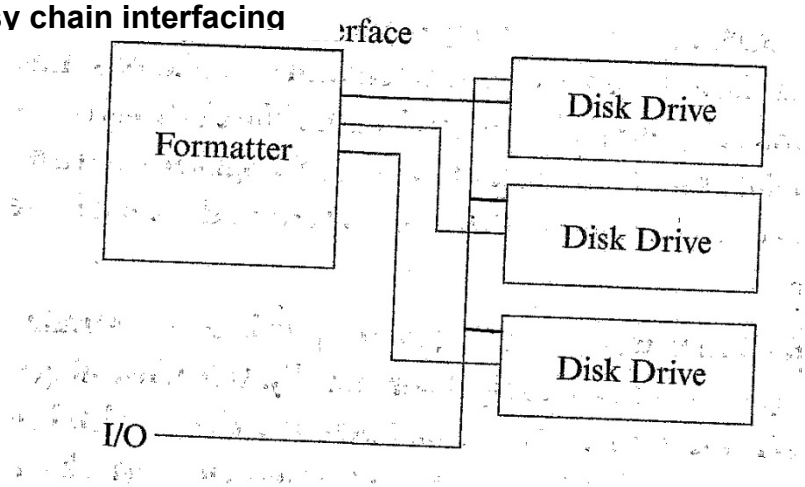

(5)
[18]

QUESTION 4

4.1 PROGRAM

Z = t + uv
Z = uv + t✓

INSTRUCTION LOCATION	INSTRUCTION WORD		DESCRIPTION
	OPCODE	ADDRESS	
BCCA	LOAD	F1B4	Load u ✓
BCCB	MULT	F1B5	Multiply with v ✓
BCCC	BRAP	BCD1✓	Branch if Acc. > 0 ✓
BCCD	ADDA	F1B3	Add value of t ✓
BCCE	BRAN	BCD1	Branch if Acc. > O ✓
BCCF	STOR	F1B9	Store in z ✓
BCD0	OUTP		Output ✓
BCD1	HALT		Halt ✓

NOTE that other programming sequences are also accepted. (10)

4.2

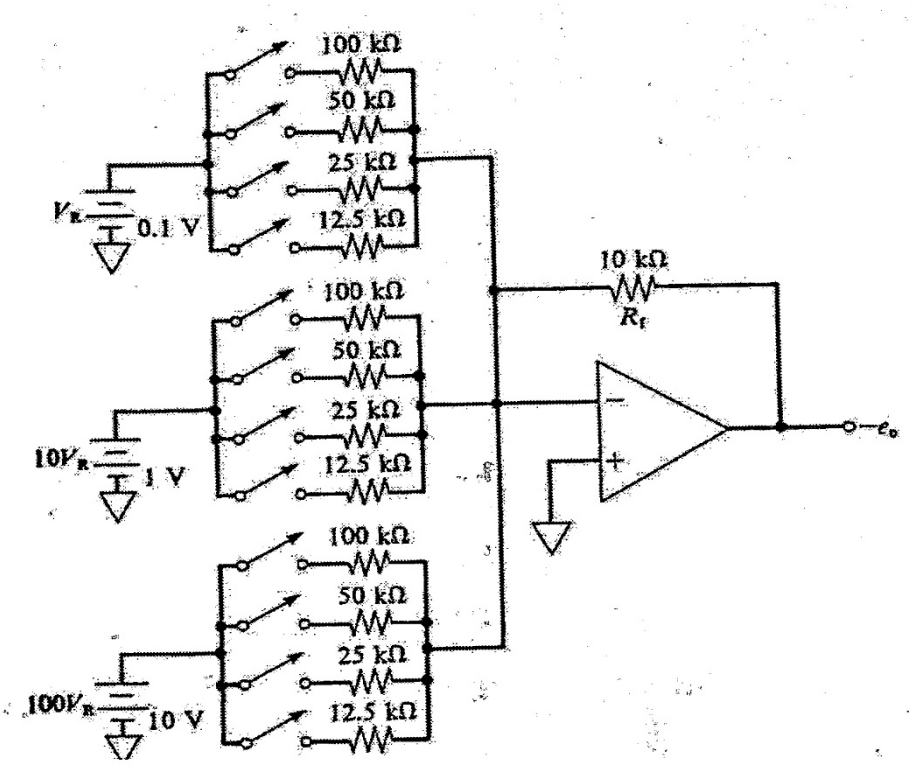

(15)
[25]

QUESTION 5

5.1 The stack is a section of RAM used during subroutines and interrupts as a temporary storage space for return addresses and data. Stack is a last-in first-out (LIFO) register. When data is put into the stack, it is said to be 'pushed'. When data is taken from the stack, it is said to be 'popped'. (5)

5.2 A subroutine can be regarded as a small program within a larger program. During program execution the microcomputer may interrupt the main program so that a subroutine may be serviced. Once the subroutine use is finished, the microcomputer returns to the main program. (5)

5.3 Number of comparators = $2^n - 1$
$= 2^2 - 1$
$= 4 - 1$
$= 3$ comparators

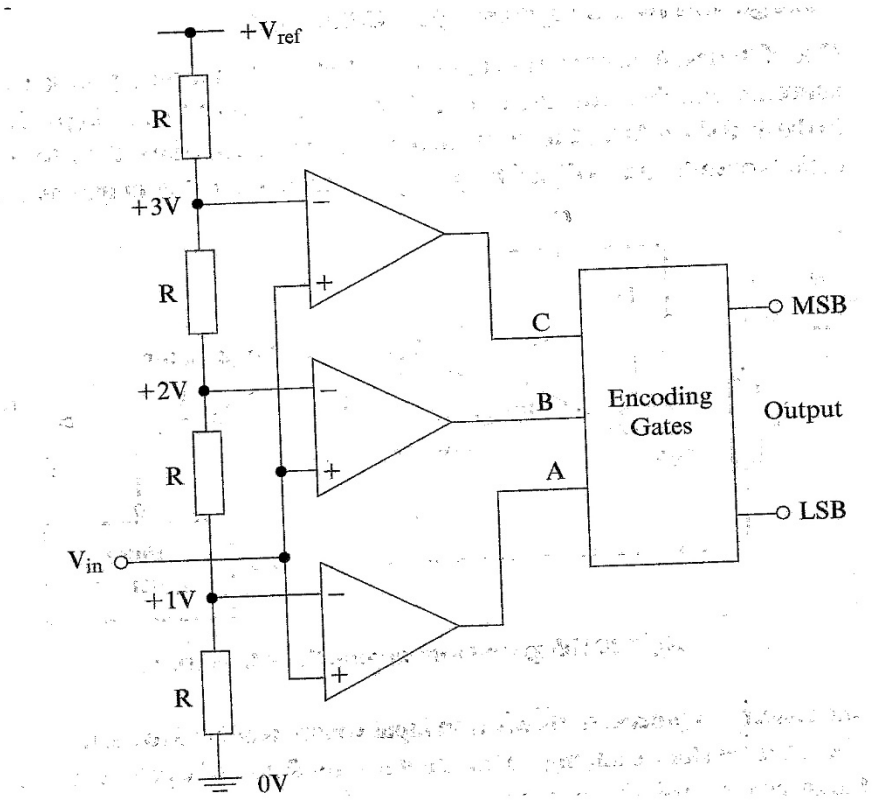

(7)
[17]

TOTAL: 100

Copyright reserved