higher education & training

Department:
Higher Education and Training
REPUBLIC OF SOUTH AFRICA

MARKING GUIDELINE

NATIONAL CERTIFICATE

LOGIC SYSTEMS N6

3 APRIL 2018

This marking guideline consists of 8 pages.

Copyright reserved

QUESTION 1

1.1

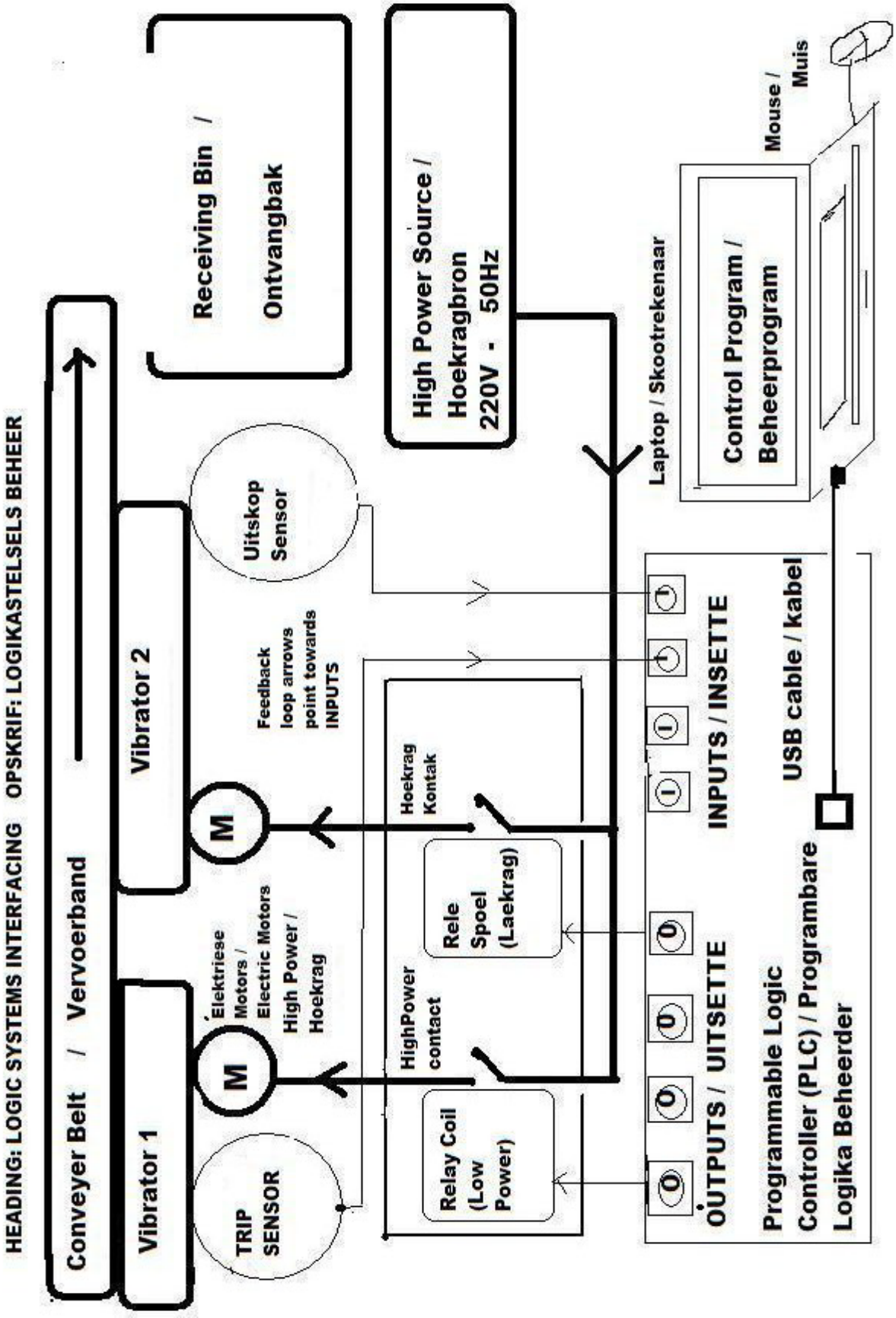

(10)

1.2

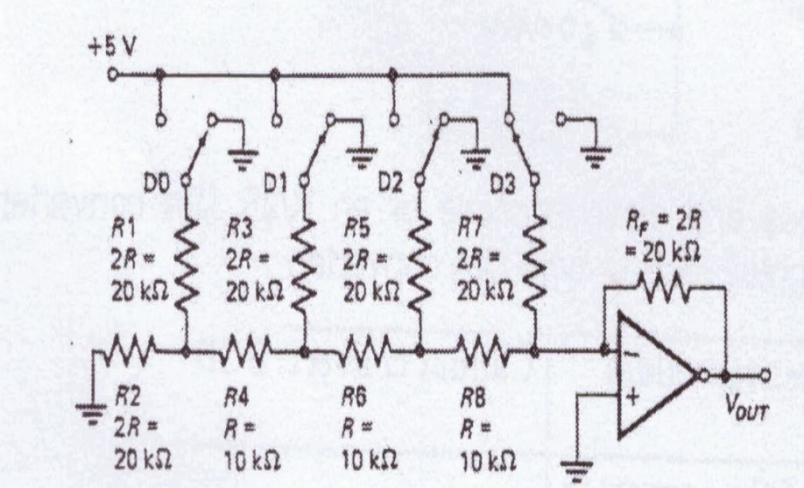

(7)

1.3 Advantages:

- Only two resistor values used
- Nonstandard resistors can be used
- Range can easily be extended by adding R/2R

Disadvantage:

- Cannot directly convert BCD (Any 2 + 1) (3)

[20]

QUESTION 2

2.1 2.1.1 False – IR holds OP-code as well.

2.1.2 False – The program counter holds the address of the next instruction.

2.1.3 False – Android is a LINUX-based operating system for mobile devices such as smartphones and tablet computers. It is open source. Microsoft has no proprietary rights over Android.

2.1.4 False – Microsoft's Office suite is not open-source software. You do not buy the source code when you buy Microsoft Office. Microsoft owns the source code and they do not allow others to alter it.

2.1.5 False – The LINUX operating system was originated by Linus Torvalds in the early 1990s and has been developed on open-source platforms since then.

(5 × 2) (10)

2.2
- Ladder diagram (graphical)
- Function block diagram (graphical)
- Structured text (text)
- Instruction list (text)
- Sequential function chart (graphical) (5 × 2) (10)

[20]

QUESTION 3

3.1
- Address bus
- Control bus
- Data bus

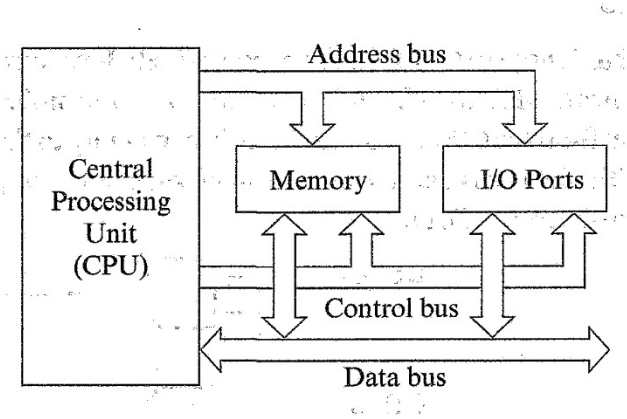

(8)

3.2
- Computer hardware costs continue to fall (in terms of computing power per monetary unit).
- Computer computational power has dramatically increased and continues to do so.
- The development of user-friendly and effective computer programs.
- Interactivity with the computer via keyboard and screen gives great advantages to a user. (Operational amplifier modifications must be done by changing physical components and output readouts are not user-friendly.) (4)

3.3

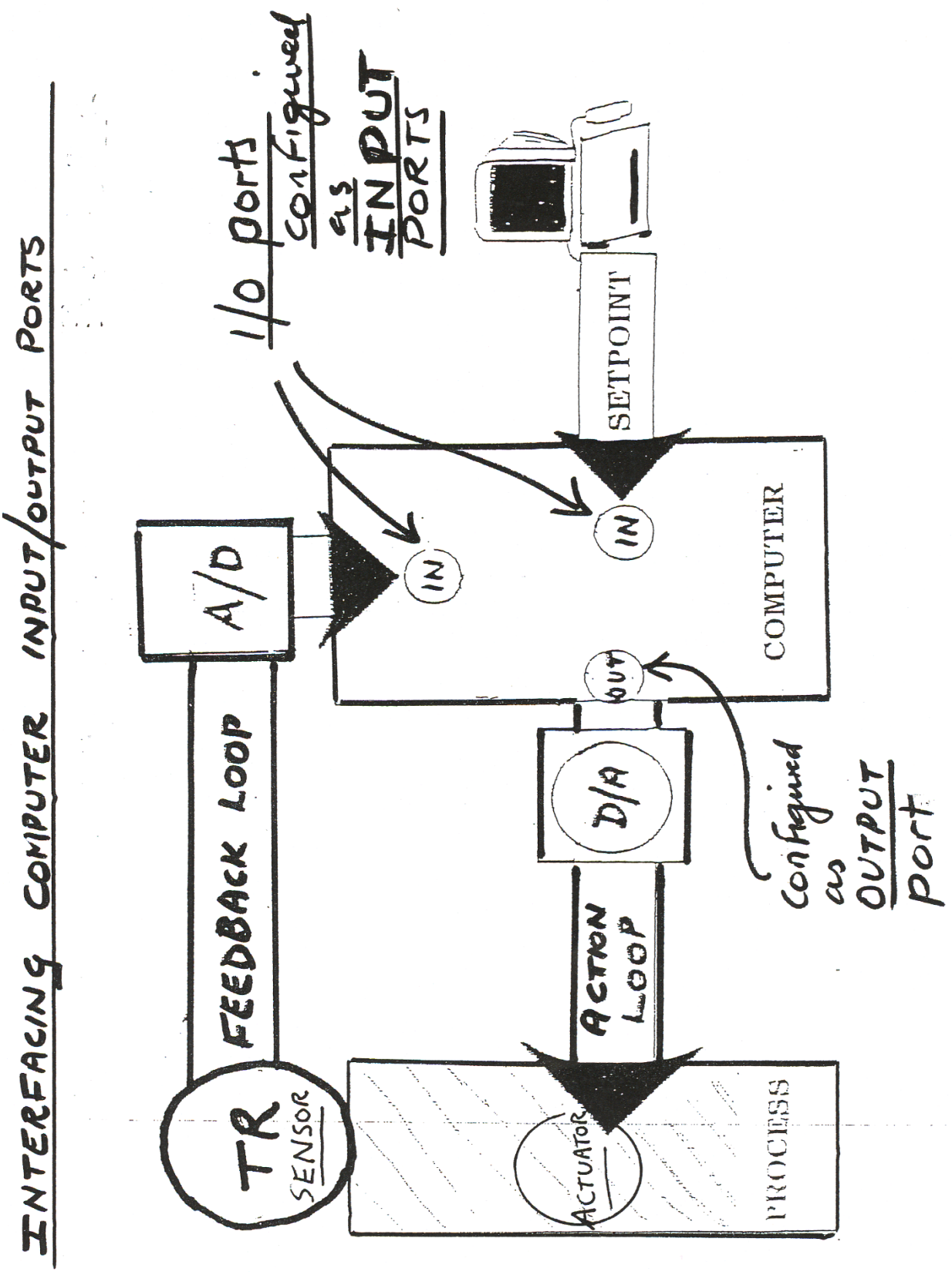
INTERFACING COMPUTER INPUT/OUTPUT PORTS
I/O ports configured as INPUT PORTS
SETPOINT
IN
IN
COMPUTER
OUT
A/D
FEEDBACK LOOP
D/A
ACTION LOOP
Configured as OUTPUT Port
TR
SENSOR
ACTUATOR
PROCESS

(8)
[20]

QUESTION 4

4.1

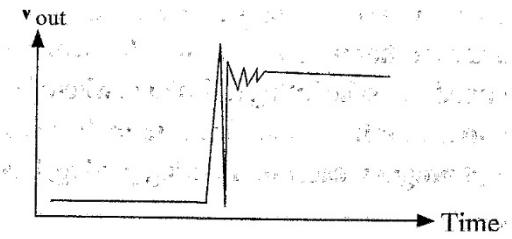

A debounce function prevents multiple microclosures of switch contacts (caused for example by rubber dome bounce) from being translated into a string of a particular character when a particular key is pressed. (4)

4.2

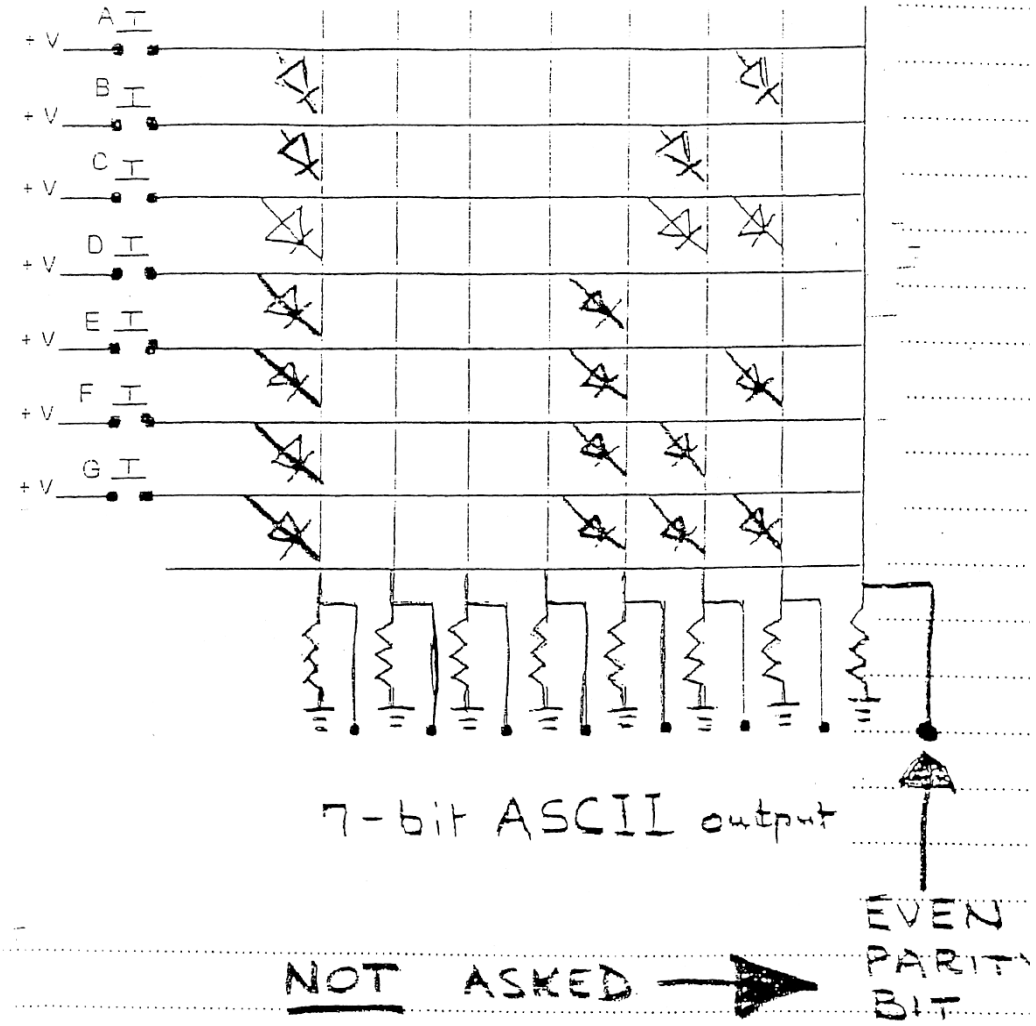

KEYBOARD CIRCUITRY USING A DIODE MATRIX TO PRODUCE ASCII CODES

Method of operation:
Conduction through the diodes of the diode matrix provides the necessary high-logic conditions at the output. (8)

4.3 Parallel DAC

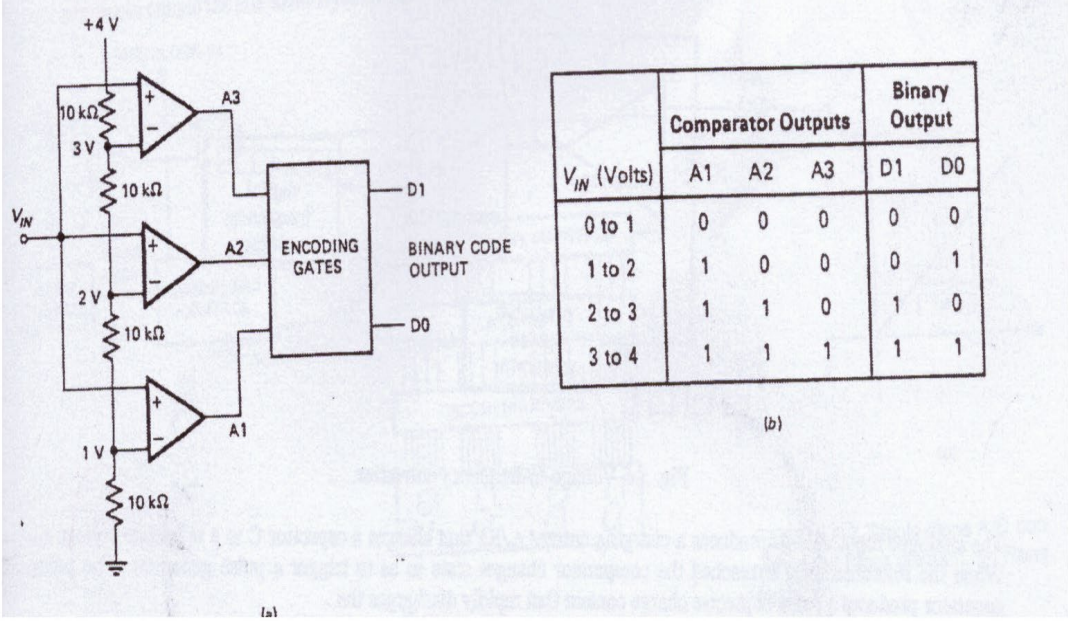

(a)

V_{IN} (Volts)	Comparator Outputs			Binary Output	
	A1	A2	A3	D1	D0
0 to 1	0	0	0	0	0
1 to 2	1	0	0	0	1
2 to 3	1	1	0	1	0
3 to 4	1	1	1	1	1

(b)

(8)
[20]

QUESTION 5

5.1

INSTRUCTION LOCATION	INSTRUCTION WORD		DESCRIPTION
	OP-CODE	ADDRESS	
CAAA	LOAD	F1B2	Load s
CAAB	ADDA	F1B7	Add x
CAAC	BRAP	CAB3	Branch if Acc > 0
CAAD	ADDA	F1B8	Add y
CAAE	BRAP	CAB3	Branch if Acc > 0
CAAF	MULT	F1B4	Multiply by u
CAB0	BRAP	CAB3	Branch if Acc > 0
CAB1	STOR	F1B9	Store in z
CAB2	OUTP		Output
CAB3	HALT		Halt

✓ ✓ ✓ ✓ ✓ ✓ ✓ ✓

. NOTE that other programming sequences are accepted but the candidate must clearly show what he/she is doing. (10)

5.2
- Linux (operating system)
- APACHE (web server)
- Android (operating system)
- OS Commerce (e-commerce)
- Mozilla Firefox (internet browser)
- PNG (portable network graphics)
- Asterisk (PBX - private branch exchange) (Any 5 × 2) (10)

[20]

TOTAL: 100

Copyright reserved