higher education & training

Department:
Higher Education and Training
REPUBLIC OF SOUTH AFRICA

MARKING GUIDELINE

NATIONAL CERTIFICATE

APRIL EXAMINATION

LOGIC SYSTEMS N6

7 APRIL 2015

This marking guideline consists of 11 pages.

Copyright reserved

QUESTION 1

1.1

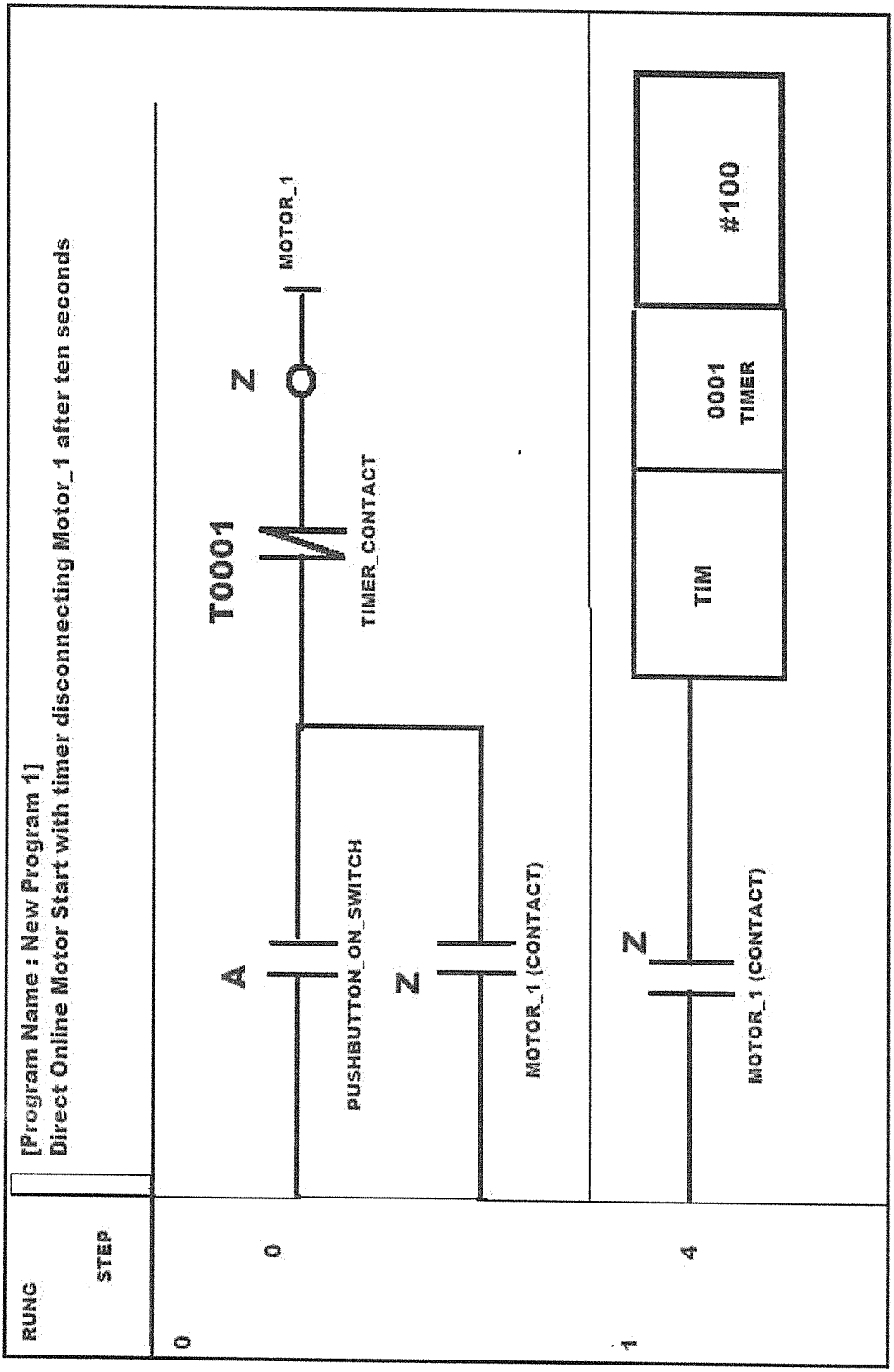

(10)

√ √ √ √ √ √ √ √ √ √

MARK ALLOCATION IS GIVEN BELOW

1.2 LISTING THE PROGRAMMING LANGUAGES DEFINED BY THE INTERNATIONAL ELECTROTECHNICAL COMMISSION UNDER OPEN INTERNATIONAL STANDARD IEC 61131-3. (FORMAT: TEXT OR GRAPHICAL)✓

A LADDER DIAGRAM (GRAPHICAL)√
B FUNCTION BLOCK DIAGRAM (GRAPHICAL)√√
C STRUCTURED TEXT (TEXT)√√
D INSTRUCTION LIST (TEXT)√√
E SEQUENTIAL FUNCTION CHART (GRAPHICAL)√√ (10)

[20]

Copyright reserved

QUESTION 2

2.1

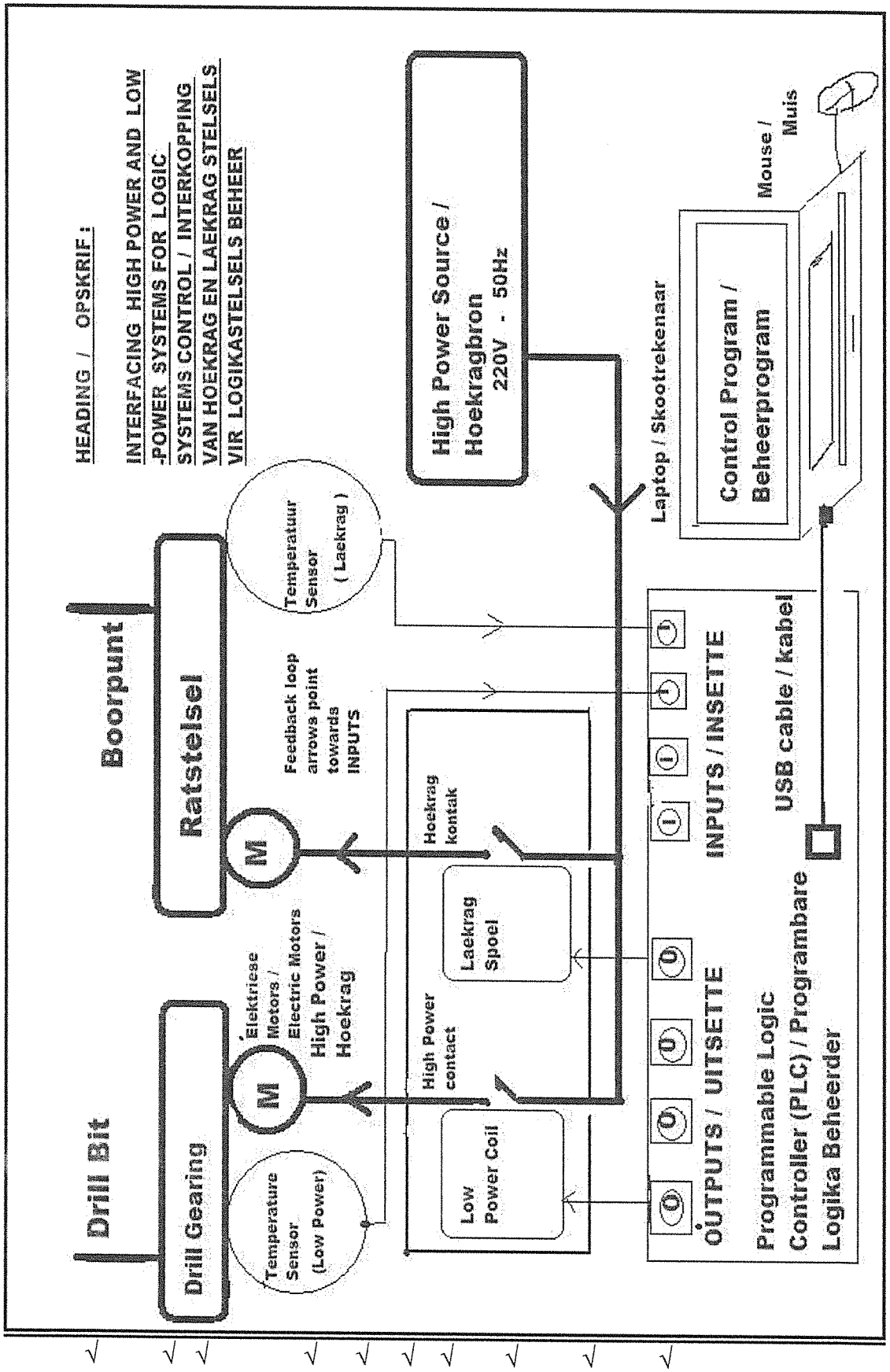

(10)

2.2 2.2.1 The simplest mathematical form of the equation which this program segment solves.

Y = r + r + r + r + r -- s — s – s + t + t + t + t√√

Y = 5r -- 3s + 4t√√ (4)

2.2.2 The language used to write this programming segment is:

ASSEMBLER (which uses mnemonics like: ADDA, MULT and so on). (4)

2.2.3 Showing ALL STEPS to calculate the decimal output of the program segment:

Y = 5(F1B1) -- 3(F1B2) + 4(F1B3)

Y = 5r -- 3s + 4t

Y = 5(1100) -- 3(1000) + 4(900)

Y = 5500 -- 3000 + 3600

Y = 6100 (DECIMAL) √√

MARK ALLOCATION IS ALSO GIVEN BELOW. (2)
[20]

Copyright reserved

QUESTION 3

3.1 STAIRCASE-RAMP VOLTAGE COMPARISON ANALOGUE-TO-DIGITAL CONVERTOR : BLOCK DIAGRAM

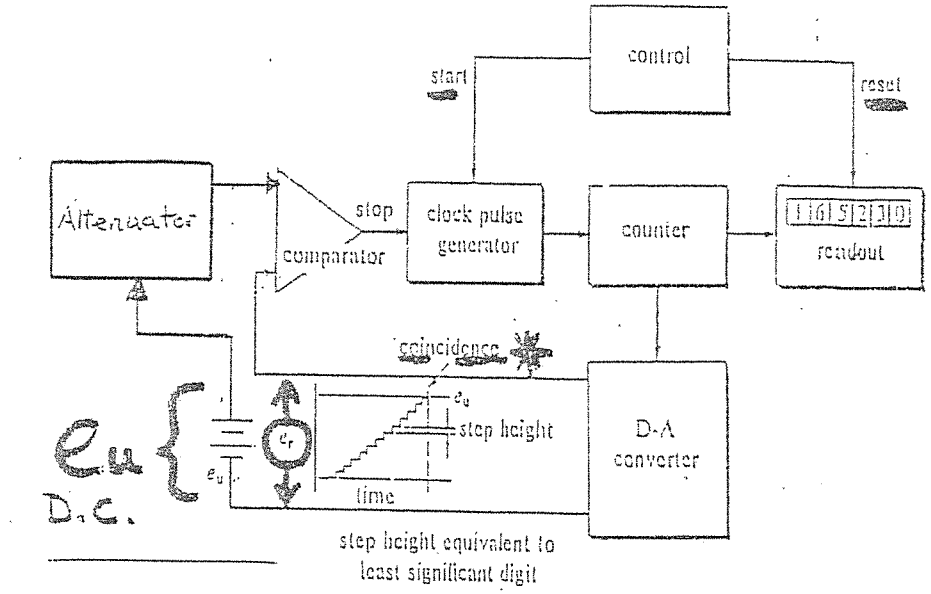

√ √√ √√ √ √ (7)

3.2 DISADVANTAGE OF THE STAIRCASE RAMP IN COMPARISON WITH THE SUCCESSIVE APPROXIMATION ANALOGUE-TO-DIGITAL CONVERTER:√

The disadvantage of the staircase ramp in comparison to the successive approximation ADC is that it is SLOWER. The reason for this is as follows:
The staircase ramp uses a counter (which increments the LSB) to count up to the input voltage. If input voltage is high then the count (and the upward moving staircase towards that value) can take a long time. The successive approximation ADC uses a REGISTER instead of a counter. This allows the MSB (Most Significant Bit) to be set and this saves the long time that a count can take. (7)

Copyright reserved

3.3 BLOCK DIAGRAM OF THE SUCCESSIVE APPROXIMATION ADC

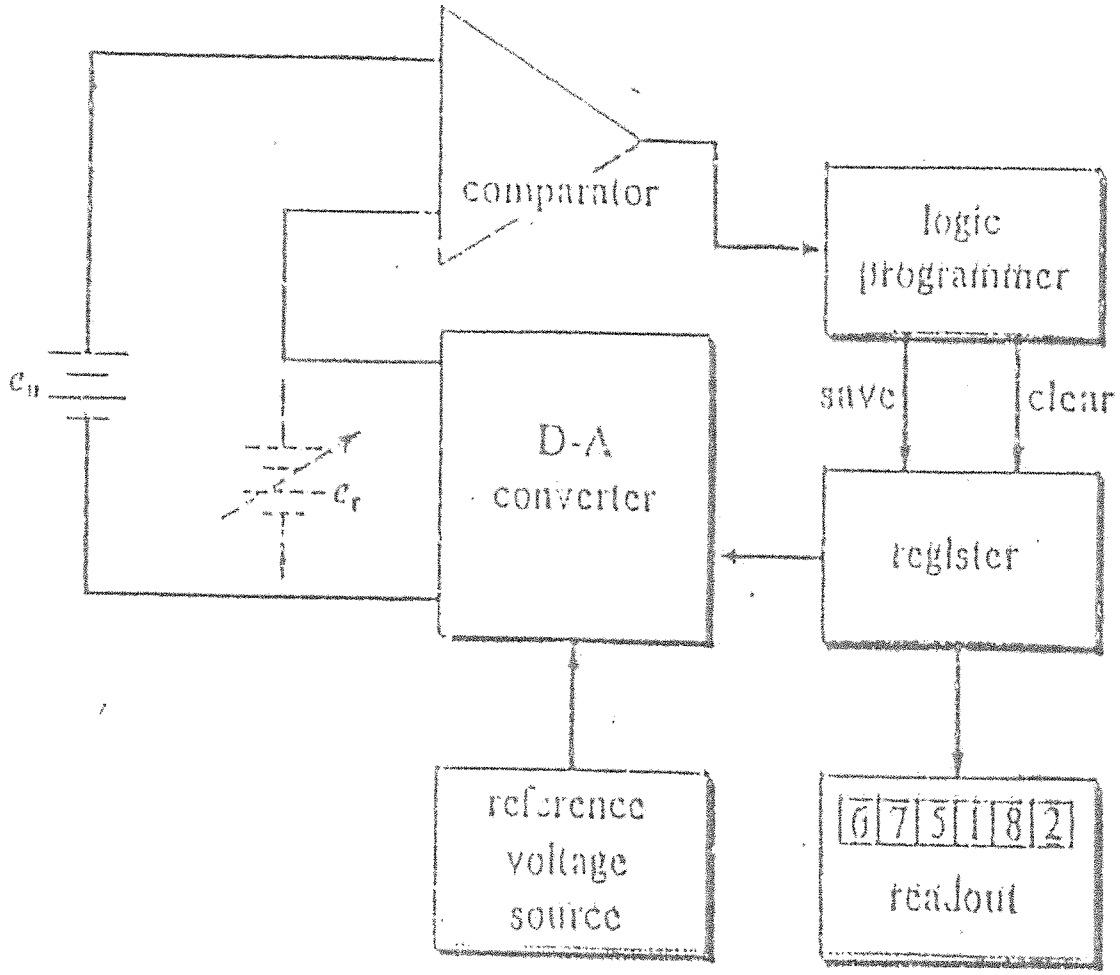

√ √ √ √ √

LOOK DIRECTLY BELOW FOR THE MARK ALLOCATION OF THE ABOVE QUESTION: (6)
[20]

Copyright reserved

QUESTION 4

4.1 **L.C. TOGGLING FROM STATEMENT LIST TO DIAGRAM:**

When the Statement List Mnemonic 'OR' is displayed in Ladder Diagram the ladder diagram shows the inputs in PARALLEL√√ (2)

4.2 **CONTROL OF TANK-LEVEL USING AN OP-AMP COMPARATOR**

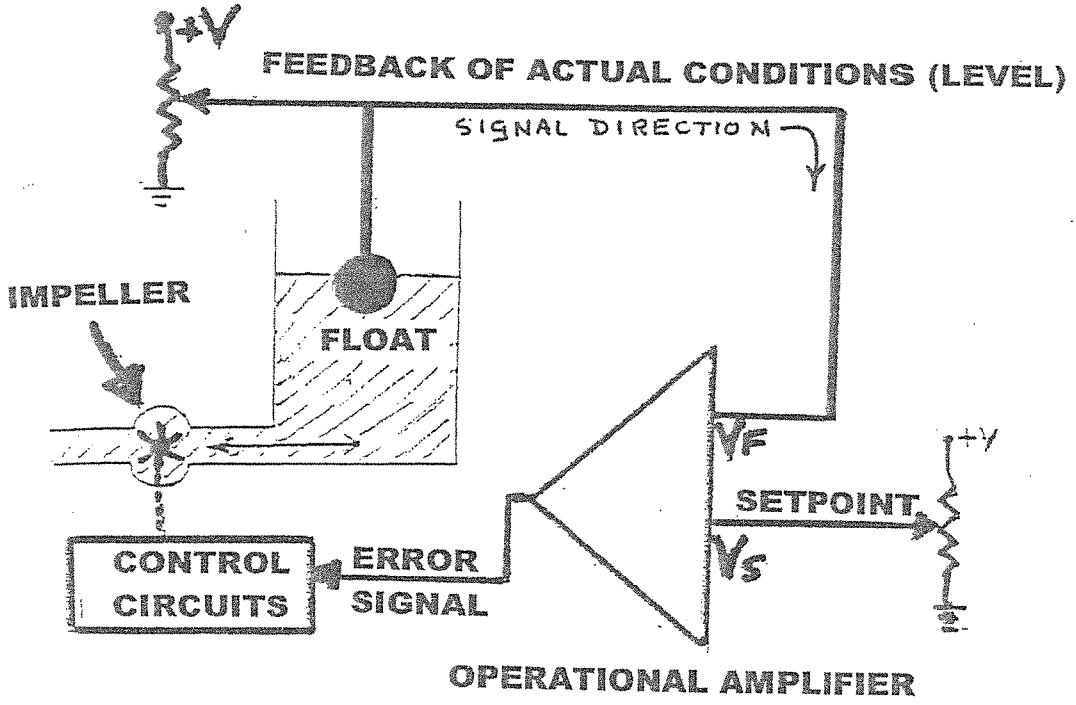

(9)

The above circuitry and process blocks show an analogue control system using an operational amplifier.

- When VF = S then the ERROR SIGNAL = 0 and the pump impeller does not move
- When VF ≠ VS than the ERROR SIGNAL causes the bi-directional pump impeller to turn until set-point level is realised.

Copyright reserved

4.3

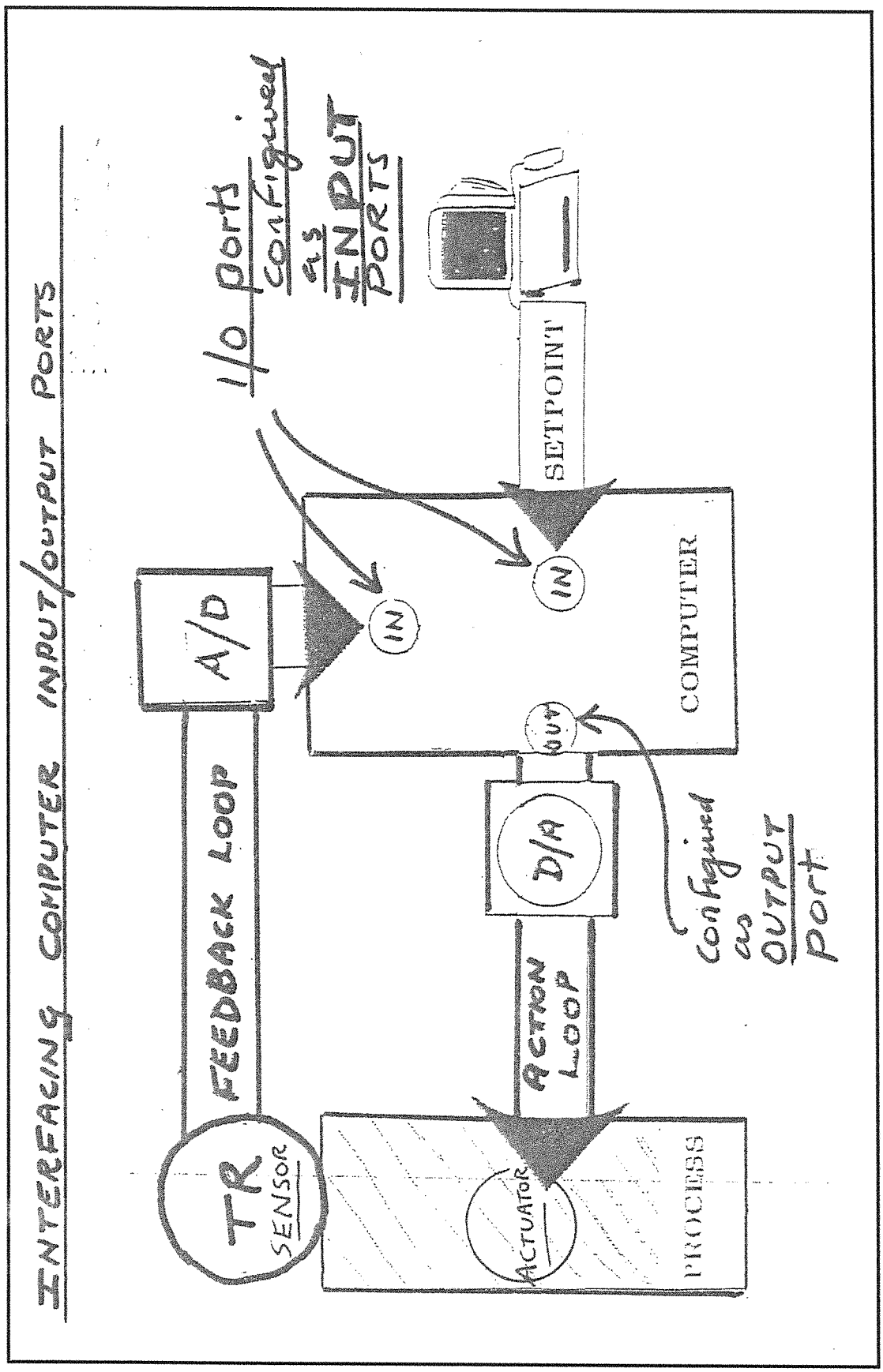
INTERFACING COMPUTER INPUT/OUTPUT PORTS
I/O ports configured as INPUT PORTS
SETPOINT
A/D
IN
IN
COMPUTER
FEEDBACK LOOP
TR
SENSOR
D/A
OUT
Configured as OUTPUT Port
ACTION LOOP
ACTUATOR
PROCESS

(9)
[20]

QUESTION 5

5.1 GLITCHES are high frequency voltage spikes (sometimes very large) which occur in the output of a digital-to-analogue converter for some changes in the input.

The glitch shown below which deforms the UP-COUNT output of a Digital-to-Analogue Converter (DAC) takes place because the time that the DAC components take to SWITCH OFF is quicker than their SWITCH-ON time. As is illustrated in the graph below this results in a deformation of the STEP waveform between count 3 and count 4. The voltage SPIKES suddenly towards 0mV before recovering at switch-on.

Components generally take longer to switch on than to switch off. Semiconductor components need to energise charge carriers when they switch on and this takes time.

GLITCH SKETCH ON FOLLOWING PAGE

STEURSPITS SKETS OP VOOLGENDE BLADSY

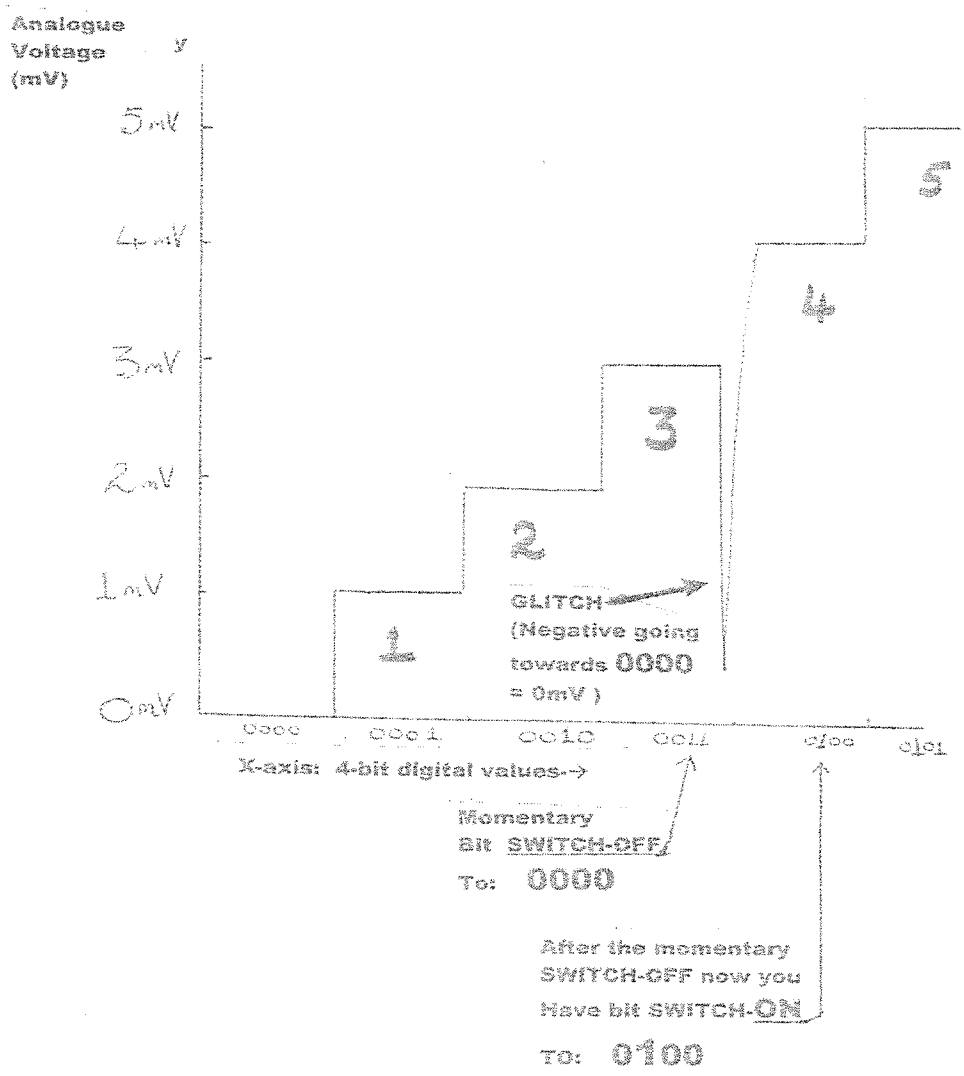

√ √ √ √ √

(5)

5.2 The International Electrotechnical Commission (IEC) is the world's leading organization that prepares and publishes International Standards for all electrical, electronic and related technologies. (5)

5.3 The International Electrotechnical Commission (IEC) is one of three global sister organization (IEC, ISO, ITU) that develop International Standards for the world. Each member country has one vote and a say in each IEC International Standard. (5)

5.4 Millions of devices that contain electronics, and use or produce electricity, rely on IEC International Standards and Conformity Assessment Systems. By complying to IEC International Standards these millions of devices perform, fit and work safely together. South Africans designing or using Logic Systems (hardware or software) must conform to IEC Standards to run our own industries and to export to the world. The IEC Open International Standard IEC 61131 is of particular importance in this regard. (5)
[20]

TOTAL: 100

Copyright reserved