

higher education & training

Department:
Higher Education and Training
REPUBLIC OF SOUTH AFRICA

MARKING GUIDELINE

NATIONAL CERTIFICATE

APRIL EXAMINATION

LOGIC SYSTEMS N6

1 APRIL 2014

This marking guideline consists of 11 pages.

Copyright reserved

QUESTION 1

1.1
- Ladder diagram (graphical)
- Function block diagram (graphical)
- Structured text (text)
- Instruction list (text)
- Sequential function chart (graphical) (10)

Copyright reserved

1.2

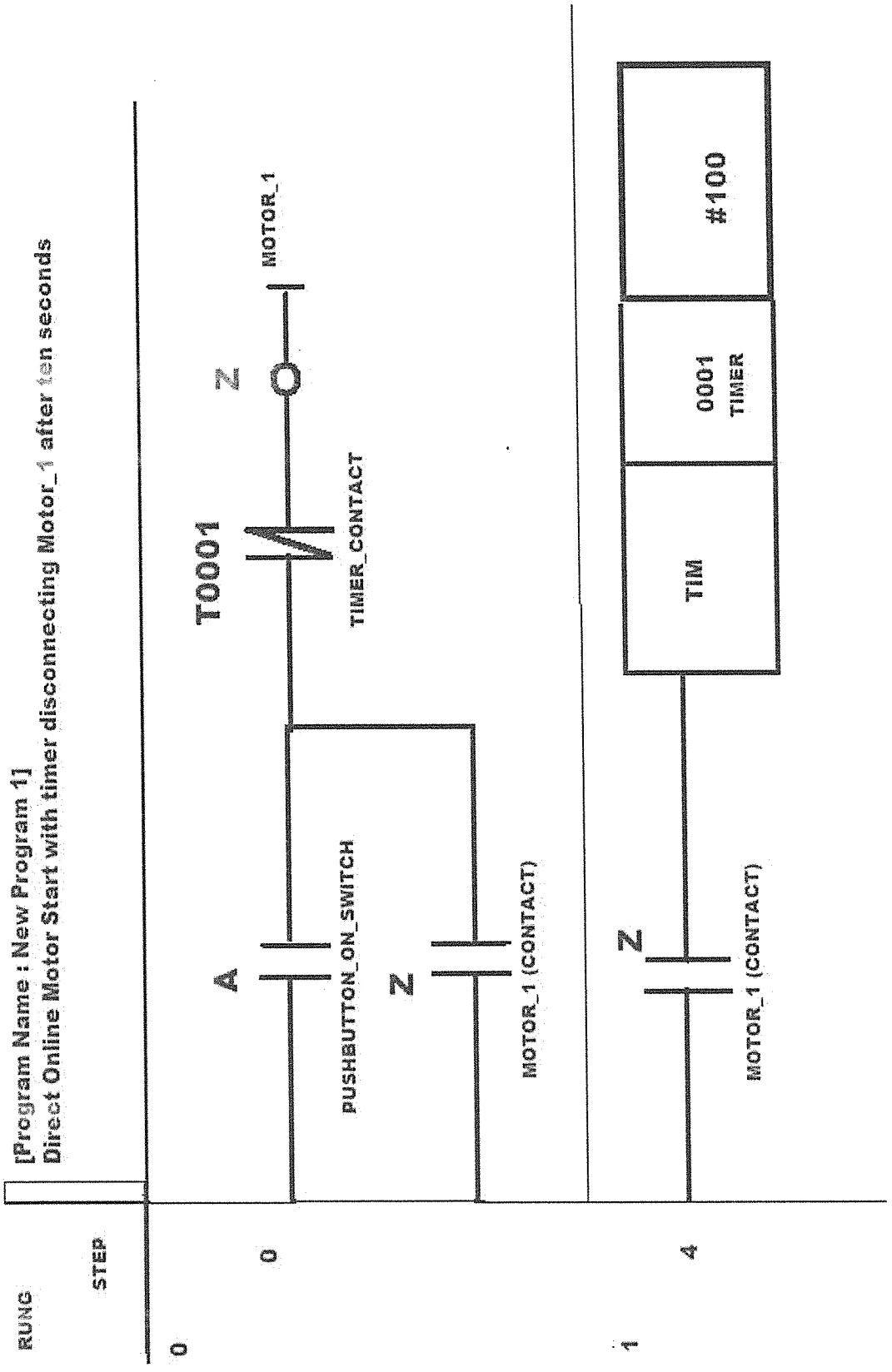
[Program Name : New Program 1]
Direct Online Motor Start with timer disconnecting Motor_1 after ten seconds
RUNG
STEP
0
0
1
4
A
PUSHBUTTON_ON_SWITCH
Z
MOTOR_1 (CONTACT)
T0001
Z
O
MOTOR_1
TIMER_CONTACT
Z
MOTOR_1 (CONTACT)
TIM
0001
TIMER
#100

√ √ √ √ √ √ √ √ √ √

(10)
[20]

QUESTION 2

2.1

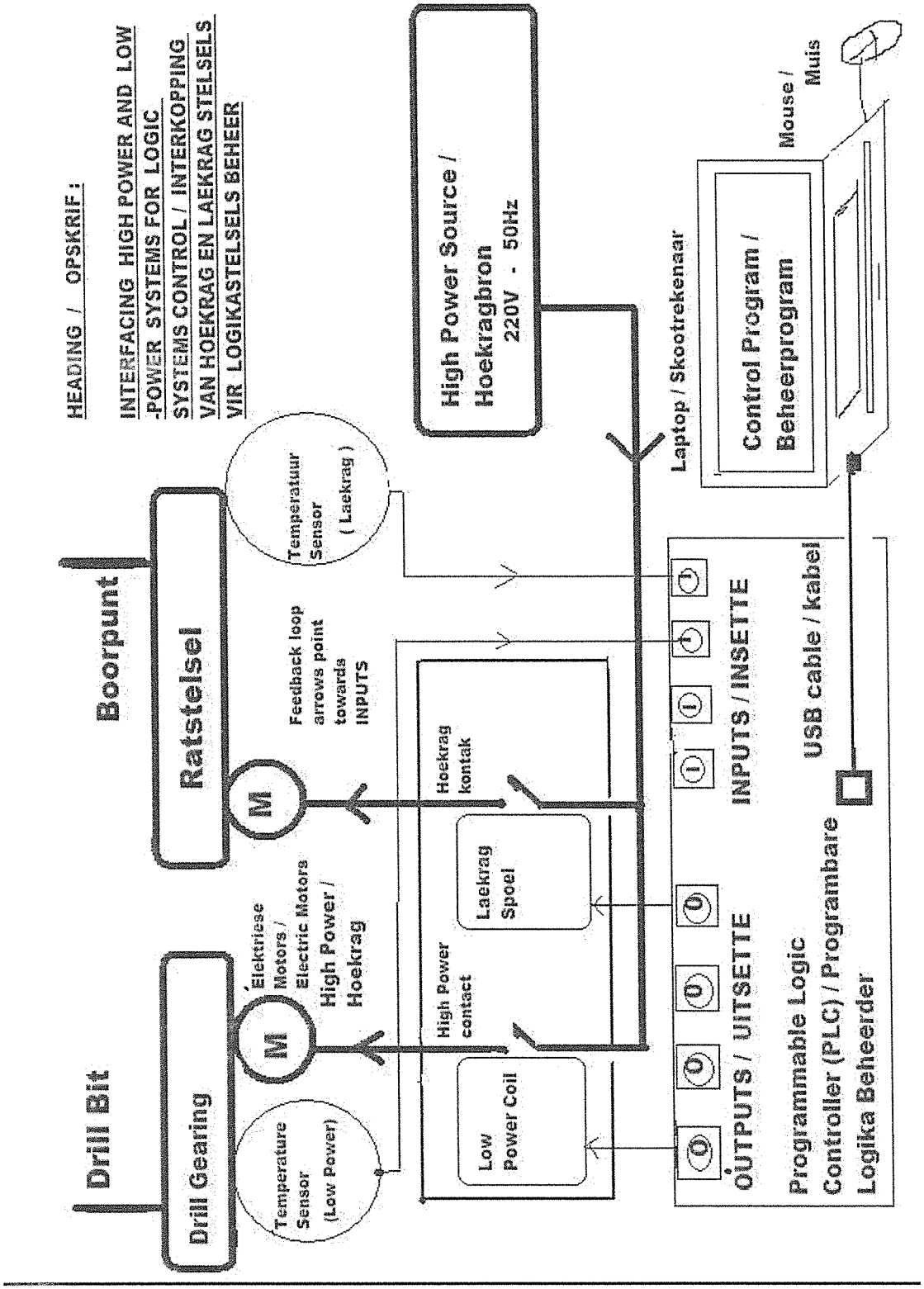

√ √ √ √ √ √ √ √ √ √ (10)

2.2 2.2.1 The simplest mathematical form of the equation which this program segment solves:

Y = r + r + r + r + r -- s — s – s + t + t + t + t

Y = 5r -- 3s + 4t (4)

2.2.2 The programming language used to write this programming segment:

ASSEMBLER (which uses mnemonics like ADDA, MULT and so on) (4)

2.2.3 All the steps to calculate the decimal output of the program segment:

Y = 5(F1B1) -- 3(F1B2) + 4(F1B3)

Y = 5r -- 3s + 4t

Y = 5(1100) -- 3(1000) + 4(900)

Y = 5500 -- 3000 + 3600

Y = 6100 (decimal) (2)
[20]

QUESTION 3

3.1 STAIRCASE RAMP VOLTAGE COMPARISON ANALOGUE-TO-DIGITAL CONVERTOR: BLOCK DIAGRAM

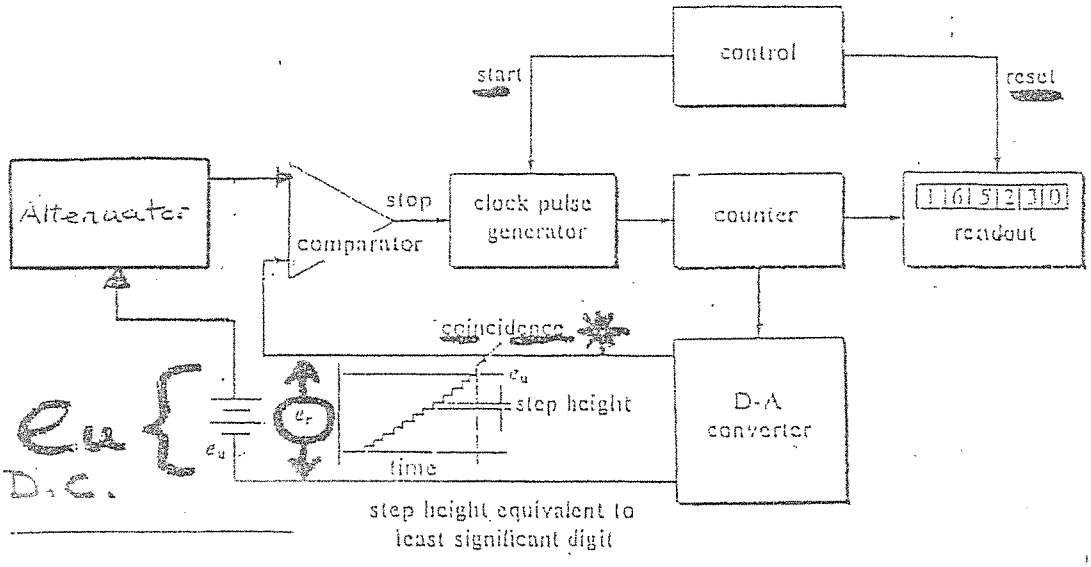

√ √√ √√ √ √ (7)

3.2 DISADVANTAGE OF THE STAIRCASE RAMP IN COMPARISON WITH THE SUCCESSIVE-APPROXIMATION ANALOGUE-TO-DIGITAL CONVERTER: √

The disadvantage of the staircase ramp ADC in comparison with the successive approximation ADC is that it is slower. The reason for this is as follows: √√

The staircase ramp uses a counter (which increments the LSB) to count up to the input voltage. If the input voltage is high then the count (and the upward moving staircase towards that value) can take a long time. The successive-approximation ADC uses a register instead of a counter. This allows the MSB (Most Significant Bit) to be set and this saves the long time that a count can take. √√ √√ (7)

Copyright reserved

3.3 BLOCK DIAGRAM OF THE SUCCESSIVE-APPROXIMATION ADC: √

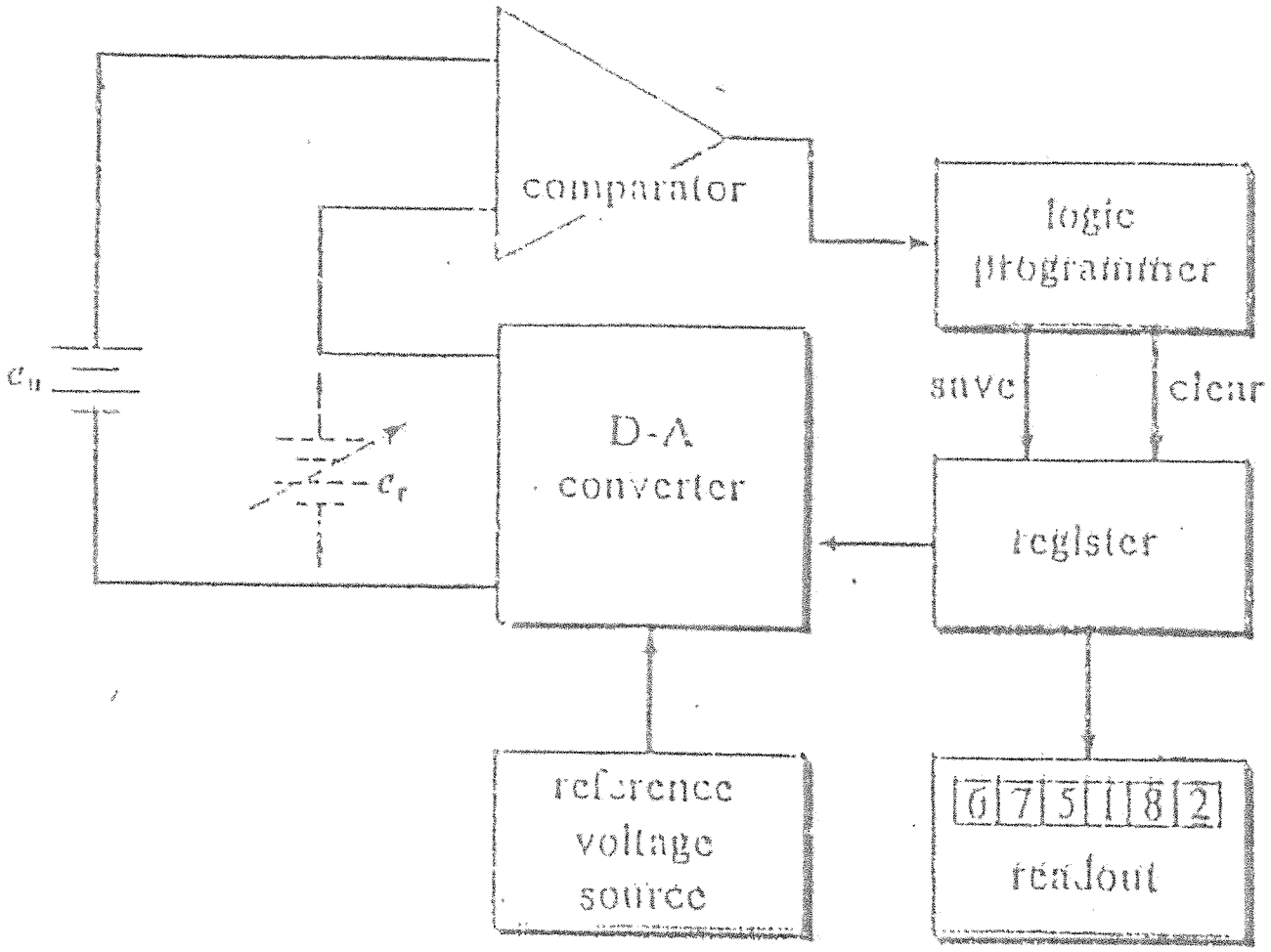

√ √ √ √ √ (6)
[20]

QUESTION 4

4.1 CONTROL OF TANK LEVEL USING AN OPERATIONAL AMPLIFIER COMPARATOR

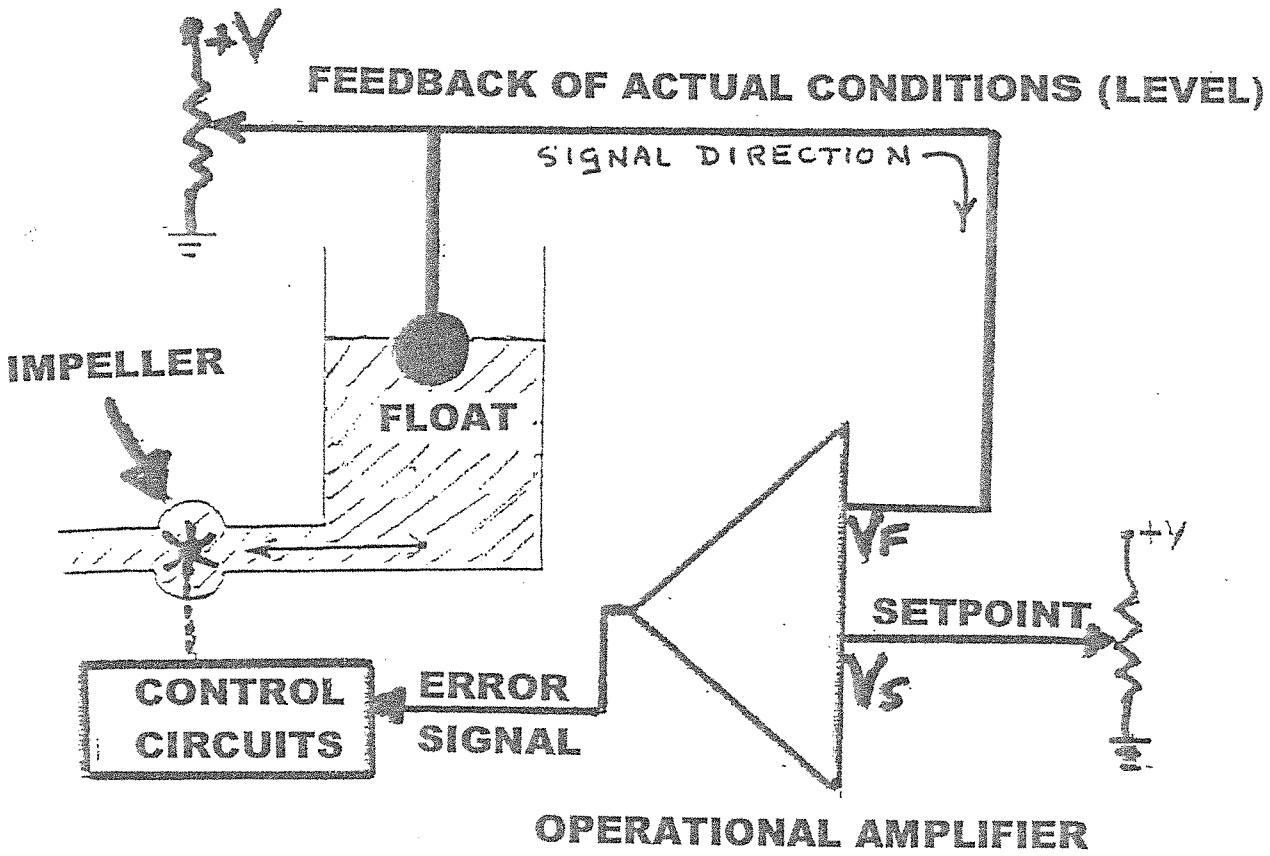

The above circuitry and process blocks show an analogue control system using an operational amplifier.

- When VF = VS then the ERROR SIGNAL = 0 and the pump impeller does not move.
- When VF ≠ VS then the ERROR SIGNAL causes the bidirectional pump impeller to turn until set-point level is realised. (9)

Copyright reserved

4.2

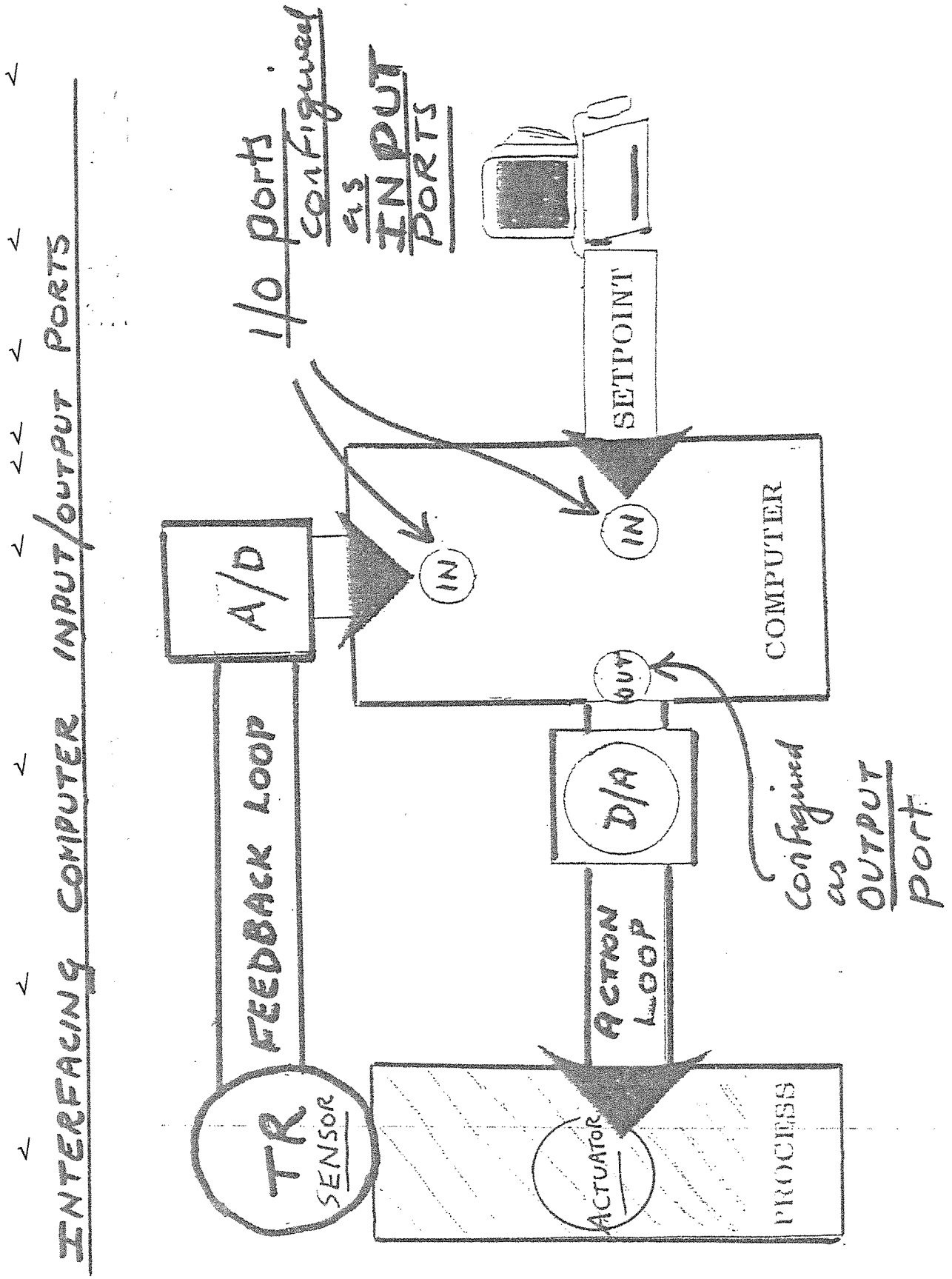

(9)

Copyright reserved

4.3 PLC TOGGLING FROM STATEMENT LIST TO DIAGRAM MODE

When the statement list mnemonic 'OR' is displayed in a ladder diagram, the ladder diagram shows the inputs in PARALLEL. √√ (2)

[20]

QUESTION 5

5.1 The International Electro-Technical Commission (IEC) is the world's leading organisation that prepares and publishes international standards for all electrical, electronic and related technologies. (5)

5.2 The International Electro-Technical Commission (IEC) is one of three global sister organisations (IEC, ISO, ITU) that develop international standards for the world. Each member country has one vote and a say in each IEC international standard. (5)

5.3 Millions of devices that contain electronics, and use or produce electricity, rely on IEC international standards and Conformity Assessment Systems. By complying to IEC International Standards these millions of devices perform, fit and work safely together. South Africans designing or using Logic Systems (hardware or software) must conform to IEC standards to run our own industries and to export to the world. The IEC Open International Standard IEC 61131-3 is of particular importance in this regard. (5)

5.4 GLITCHES are high-frequency voltage spikes (sometimes very large) which occur in the output of a digital-to-analogue converter for some changes in the input.

The glitch shown below which deforms the UP-count output of a digital-to-analogue converter (DAC) takes place because the time that the DAC components take to SWITCH OFF is quicker than their SWITCH-ON time. As illustrated in the graph below, this results in a deformation of the STEP waveform between count 3 and count 4. The voltage suddenly SPIKES towards 0 mV before recovering at switch-on.

Components generally take longer to switch on than to switch off. Semiconductor components need to energise charge carriers when they switch on and this takes time.

Copyright reserved

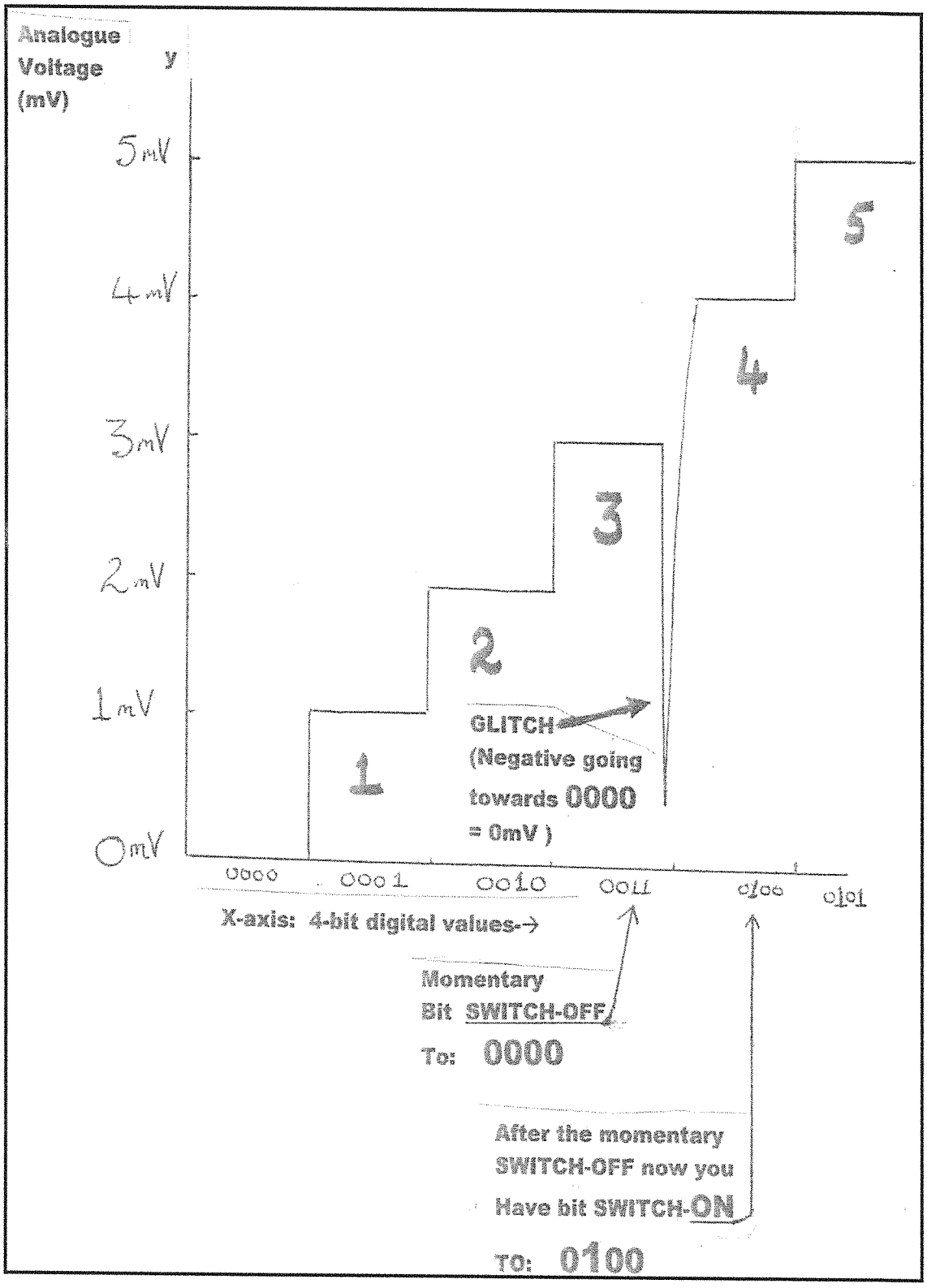

√
√
√
√
√

(5)
[20]

TOTAL: 100

Copyright reserved