higher education & training

Department:
Higher Education and Training
REPUBLIC OF SOUTH AFRICA

NASIENRIGLYN

NASIONALE SERTIFIKAAT

LOGIKASTELSELS N4

29 November 2019

Hierdie nasienriglyn bestaan uit 10 bladsye.

Kopiereg voorbehou

✓ = 1 Punt ✓1/2 = 1/2 Punt

VRAAG 1

1.1 0 ; 1 (1)

1.2 4 (1)

1.3 9 (1)

1.4 00111010_2 (2)

1.5 1.5.1 'RAM – Random access memory' (ETG – ewe toeganklike geheue/WTG - willekeurige toegangbeheer)

1.5.2 ''CD-RW – Compact disc rewritable (Herskryfbare kompakskyf)
(2 × 1) (2)

1.6

A	B	F
0	0	0
0	1	1
1	0	1
1	1	0

✓

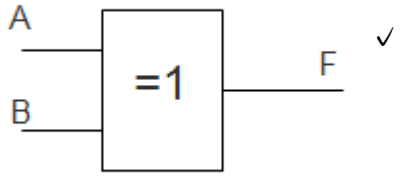

✓

$F = A \oplus B$ ✓ (3)

1.7 1.7.1 $A\bar{A}+B\bar{B}=0$ ✓

1.7.2 $AB\bar{C}+AB+1=1$ ✓

1.7.3 $BCD+B+B\overline{CD}=B$ ✓

1.7.4 $AB\bar{B}+AB\bar{A}=0$ ✓

(4 × 1) (4)

1.8 1.8.1

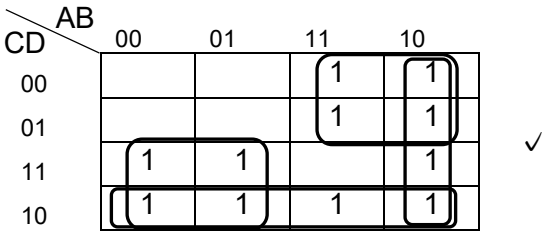

✓

$F = A\bar{C}+\bar{A}C+A\bar{B}+C\bar{D}$ ✓½ $= A \oplus C+A\bar{B}+C\bar{D}$ ✓½ (2)

1.8.2

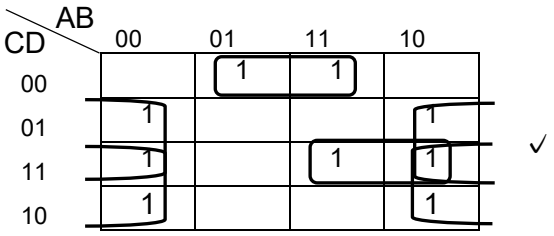

✓

$F = B\overline{C}\overline{D} + ACD + \overline{B}D + \overline{B}C$ ✓ (2)

1.8.3

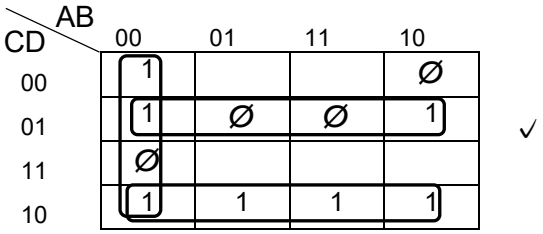

✓

$F = \overline{C}D + C\overline{D} + \overline{A}\overline{B}$ ✓½ $= C \oplus D + \overline{A}\overline{B}$ ✓½ (2)
[20]

VRAAG 2

2.1 2.1.1 $16,25_{10}$ - $17,6_8$

$16,25_{10} = 10000,010_2$ ✓½

$17,6_8 = 001111,110_2$ ✓½

$$\begin{array}{r} 10000,010 \checkmark \\ -01111,110 \end{array}$$

$$\begin{array}{r} 10000,001 \\ +\quad\quad\quad 1 \checkmark \\ \hline 10000,010 \checkmark \end{array}$$

$$\begin{array}{r} 1c + 10000,010 \\ \hline 00000,100 \checkmark \end{array}$$

$0,100_2 = 0,4_8$ ✓

2.1.2 $148,35_{10} \times 16,8_8$

$148,35_8 = 10010100,010_2$ ✓½

$16,8_{16} = 00010110,1000_2$ ✓½

$$
\begin{array}{r}
100101100,0100 \\
\times \quad 10110,1000 \\
\hline
1001011000100000 \\
100101100010000000 \checkmark \\
100101100010000000 \checkmark \\
+ \quad 100101100010000000000 \checkmark \\
\hline
1101001100011,10100000 \checkmark
\end{array}
$$

$0001101001100011,1010 = 1A63,A_{16}$ ✓

2.1.3 $647,3_8 \div 16,25_{10}$

$647,3_8 = 110100111,011_2$ ✓½

$16,25_{10} = 1111,01_2$ ✓½

$$
\begin{array}{r}
11011,110 \checkmark \\
\hline
111101 \overline{)\,11010011101,100} \\
\underline{-111101} \ \checkmark \\
1011001 \\
\underline{-111101} \ \checkmark \\
1110010 \\
\underline{-111101} \\
1101011 \\
\underline{-111101} \\
1011101 \\
\underline{-111101} \\
1000000 \\
\underline{-111101} \\
0000110 \checkmark
\end{array}
$$

$11011,110_2 = 27,75_{10}$ ✓

(3 × 6) (18)

2.2 Amerikaanse Standaardkode vir Inligtinguitruiling ('American Standard Code for Information Interchange') (2)

2.3 **@ - 100 0000**
C - 100 0011
a - 110 0001
T - 101 0100
! - 010 0001
(5)
[25]

VRAAG 3

3.1 3.1.1

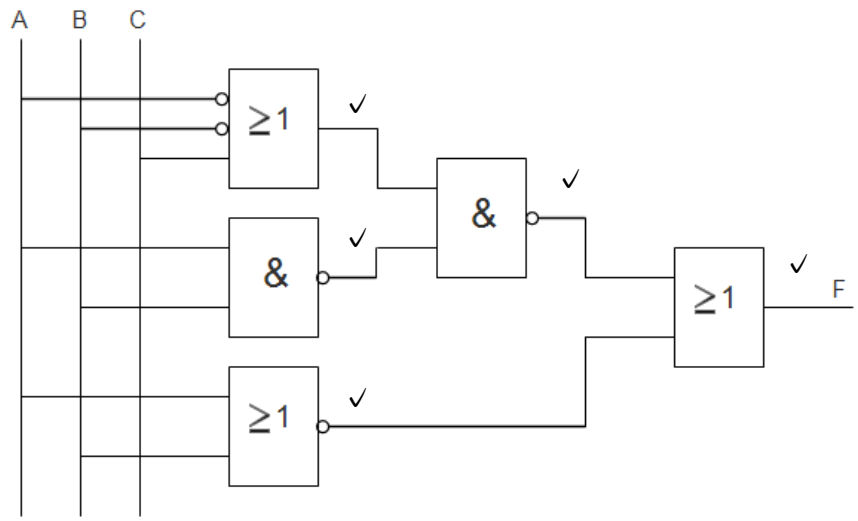

3.1.2

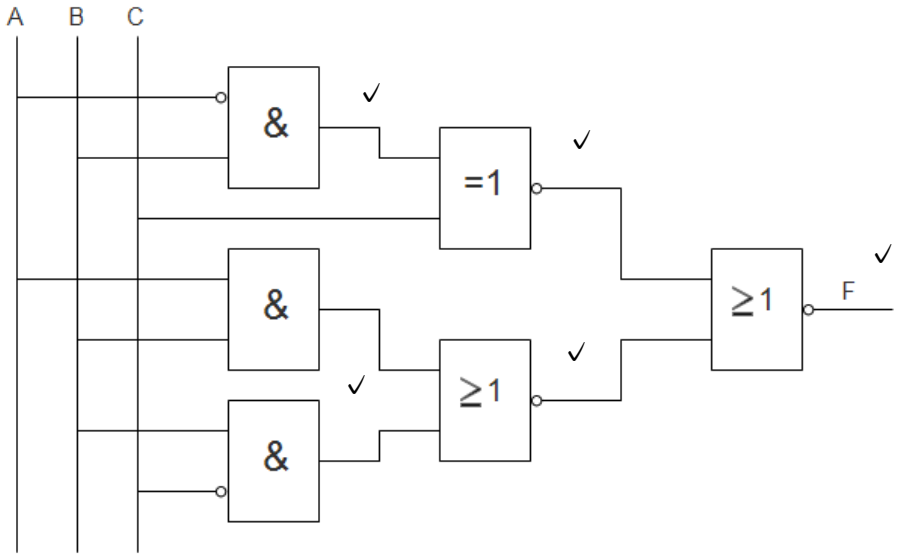

3.1.3

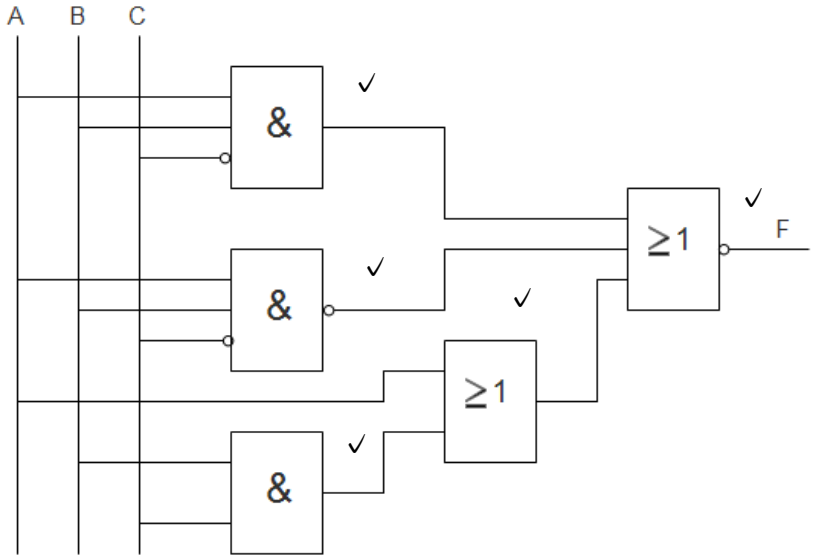

(3 × 5) (15)

3.2 3.2.1

$$F = A(A+B+C)(\overline{B}+\overline{C})(\overline{A}+B+C)$$

$$= (A+AB+AC)(\overline{B}+\overline{C})(\overline{A}+B+C) \quad \checkmark\tfrac{1}{2}$$

$$= A(\overline{B}+\overline{C})(\overline{A}+B+C) \quad \checkmark\tfrac{1}{2}$$

$$= (A\overline{B}+A\overline{C})(\overline{A}+B+C) \quad \checkmark\tfrac{1}{2}$$

$$= A\overline{B}C+AB\overline{C} \quad \checkmark\tfrac{1}{2}$$

$$= \overline{\overline{A\overline{B}C+AB\overline{C}}}$$

$$= \overline{\overline{A\overline{B}C}.\ \overline{AB\overline{C}}} \quad \checkmark$$

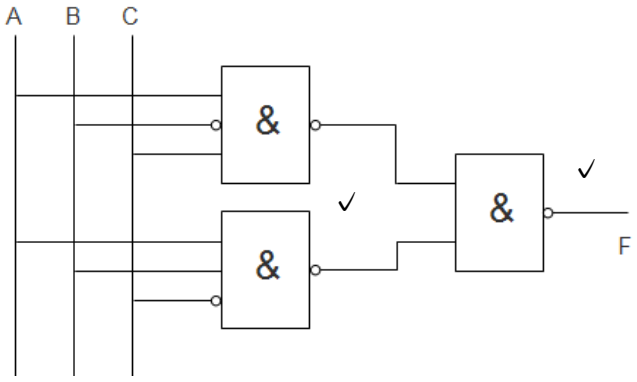

3.2.2 $F = AB + \overline{\overline{A}B\overline{C} + A\overline{B} + \overline{A}C}$

$= AB + \overline{\overline{A}B\overline{C}} \cdot \overline{A\overline{B}} \cdot \overline{\overline{A}C}$ ✓½

$= AB + (A + \overline{B} + C)(\overline{A} + B)(A + \overline{C})$ ✓½

$= AB + (AB + \overline{A}\overline{B} + \overline{A}C + BC)(A + \overline{C})$

$= AB + AB + ABC + AB\overline{C} + \overline{A}\overline{B}\overline{C}$

$= AB(1 + 1 + C + \overline{C}) + \overline{A}\overline{B}\overline{C}$ ✓½

$= AB + \overline{A}\overline{B}\overline{C}$ ✓½

$= \overline{\overline{AB + \overline{A}\overline{B}\overline{C}}}$

$= \overline{\overline{AB} \cdot \overline{\overline{A}\overline{B}\overline{C}}}$ ✓

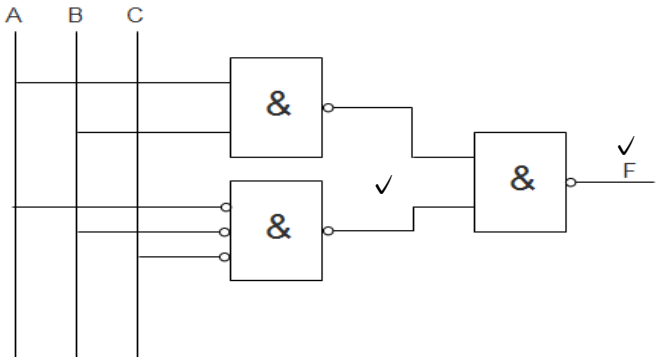

(5 × 2) (10)
[25]

VRAAG 4

Inset (8421 BCD)				uitset (XS-3)			
A	B	C	D	W	X	Y	Z
0	0	0	0	0	0	1	1
0	0	0	1	0	1	0	0
0	0	1	0	0	1	0	1
0	0	1	1	0	1	1	0
0	1	0	0	0	1	1	1
0	1	0	1	1	0	0	0
0	1	1	0	1	0	0	1
0	1	1	1	1	0	1	0
1	0	0	0	1	0	1	1
1	0	0	1	1	1	0	0
1	0	1	0	Ø	Ø	Ø	Ø
1	0	1	1	Ø	Ø	Ø	Ø
1	1	0	0	Ø	Ø	Ø	Ø
1	1	0	1	Ø	Ø	Ø	Ø
1	1	1	0	Ø	Ø	Ø	Ø
1	1	1	1	Ø	Ø	Ø	Ø
✓½	✓½	✓½	✓½	✓½	✓½	✓½	✓½

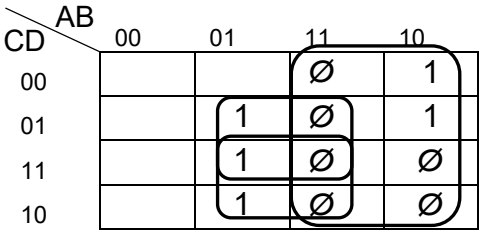

✓

$W = A + BD + BC$ ✓

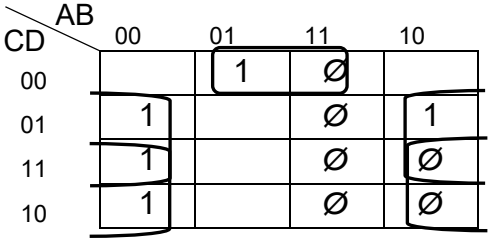

✓

$X = B\overline{C}\overline{D} + \overline{B}D + \overline{B}C$ ✓

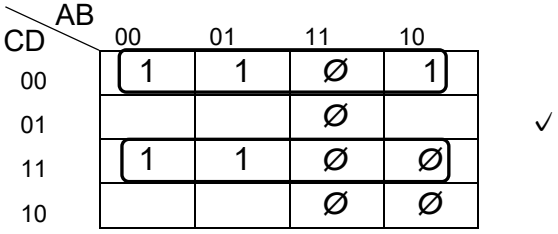

✓

$Y = \overline{C}\overline{D} + CD = \overline{C \oplus D}$ ✓

CD \ AB	00	01	11	10
00	1	1	Ø	1
01			Ø	
11			Ø	Ø
10	1	1	Ø	Ø

✓

$Z = \bar{D}$ ✓

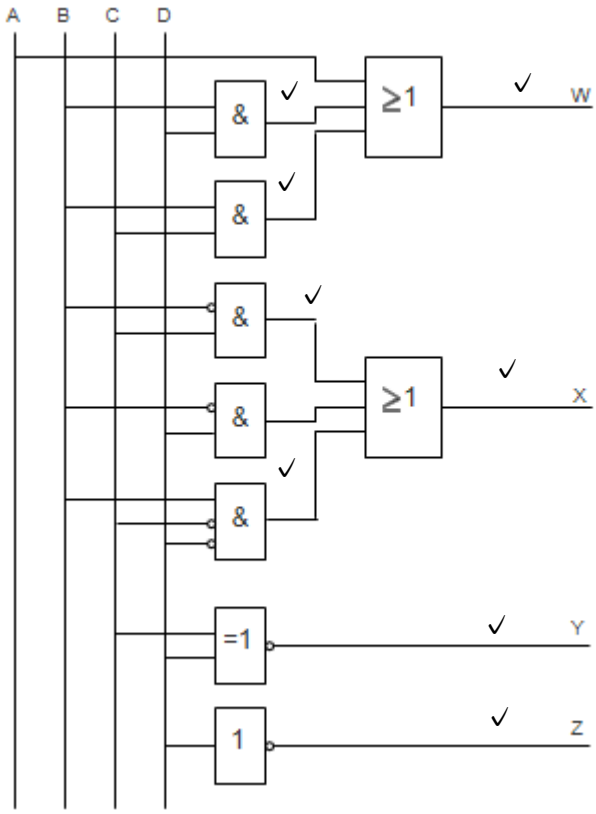

[20]

VRAAG 5

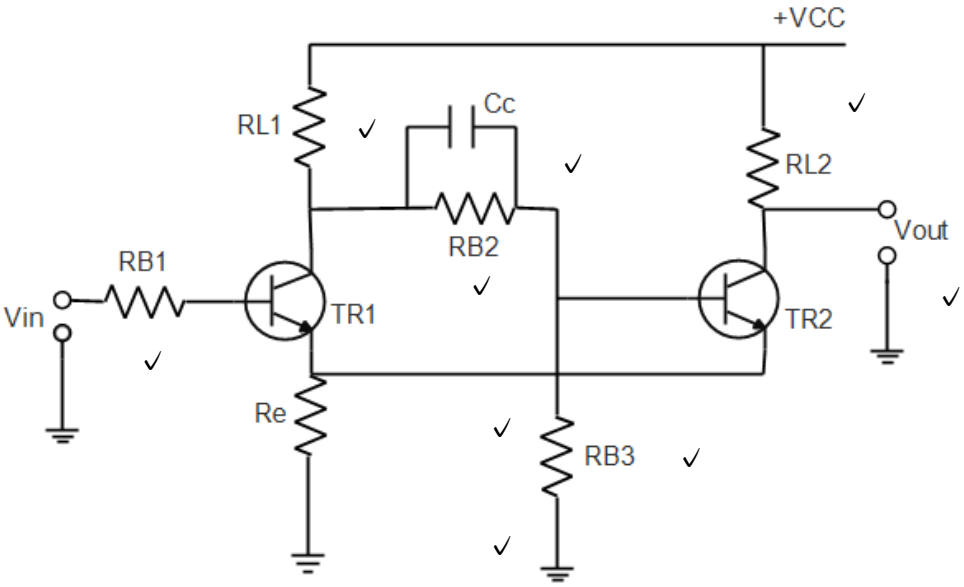

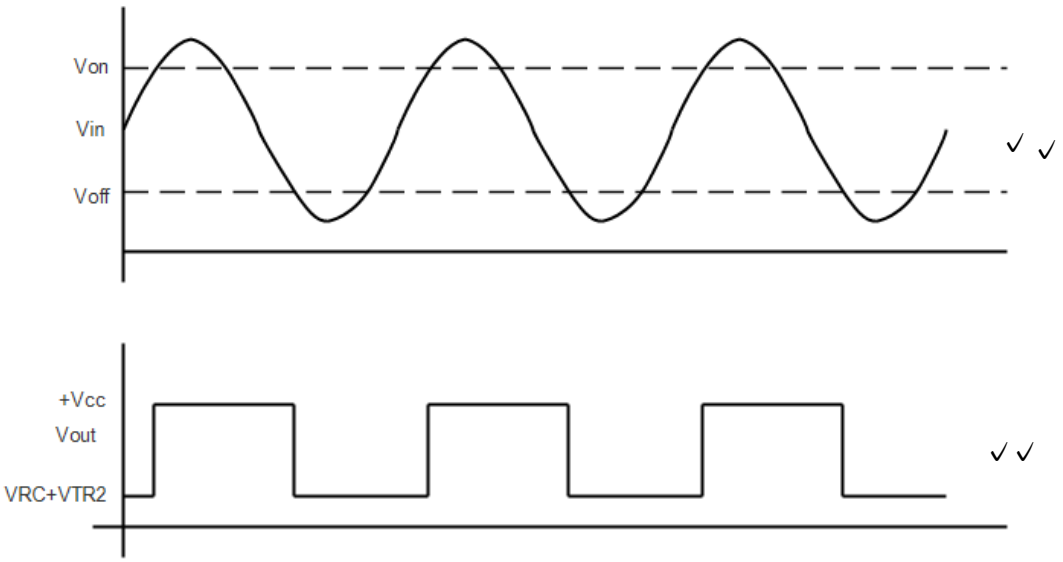

[10]

TOTAAL: 100

Kopiereg voorbehou