higher education & training

Department:
Higher Education and Training
REPUBLIC OF SOUTH AFRICA

NASIENRIGLYN

NASIONALE SERTIFIKAAT

LOGIKASTELSELS N4

19 April 2021

Hierdie nasienriglyn bestaan uit 9 bladsye.

Kopiereg voorbehou

VRAAG 1

1.1 Dit is 'n niegeweegde posisionele kode. (1)

1.2 0,1,2,3,4,5,6,7 (1)

1.3. $2^3 = 8$ (1)

1.4 2421_{BCD} (1)

1.5 Asinchrone binêre teller (1)

1.6 $F = \overline{A+B}$ ✓

A	B	F
0	0	1
0	1	0
1	0	0
1	1	0

✓

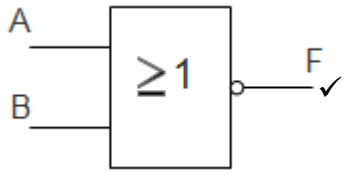

✓

(3)

1.7 Vastefunksie-GS'e (geïntegreerde stroombane) met tot tien ekwivalente hekbane (basiese hekke en wipbane) op een tjip (2)

1.8 1.8.1 1
1.8.2 A + B
1.8.3 A + BC
1.8.4 1

(4 × 1) (4)

1.9 1.9.1

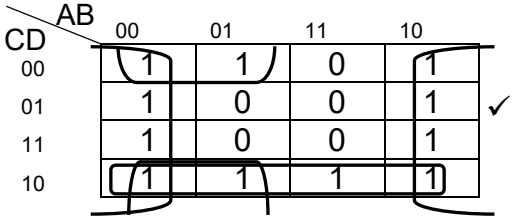

✓

$F = \overline{B} + C\overline{D} + \overline{A}\overline{D}$ ✓

1.9.2

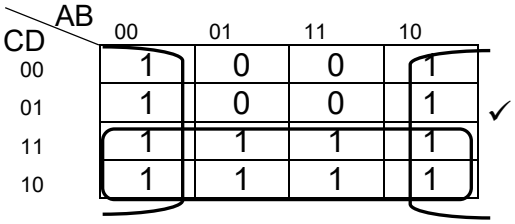

$F = \overline{B} + C$ ✓

1.9.3

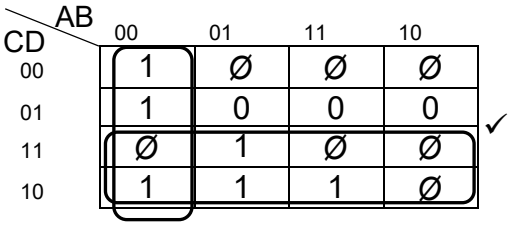

$F = \overline{A}\overline{B} + C$ ✓

(3 × 2) (6)
[20]

VRAAG 2

2.1 2.1.1 $15,6_8 - 17,25_{10}$

$15,6_8 = 1101,110_2$ √

$17,25_{10} = 10001,01_2$ √

$$\begin{array}{r} 0 * 001101,11 \checkmark \\ +1 * 101110,10 \checkmark \\ \hline 1 * 111100,01 \checkmark \end{array}$$

$= -00011,10$ ✓

$-11,1_2 = -3,5_{10}$ ✓

2.1.2 $AC,8_{16} \times 3,4_8$

$AC,8_{10} = 10101100,1000_2$ √

$3,4_8 = 011,100_2$ √

$$\begin{array}{r} 10101100,1 \\ \times \quad 11,1 \\ \hline 101011001 \checkmark \\ 1010110010 \checkmark \\ + \quad 10101100100 \checkmark \\ \hline 100101101111 \checkmark \end{array}$$

$1001011011,11 = 1133,6_8$ ✓

2.1.3 $143,15_{10} \div 2,4_8$

$143,15_{10} = 10001111,001_2$ √

$2,4_8 = 010,100_2$ √

$$\begin{array}{r} 111001,01 \checkmark \\ 10100 \overline{)\,10001111001,00} \\ \underline{-10100} \ \checkmark \\ 11111 \\ \underline{-10100} \ \checkmark \\ 10111 \\ \underline{-10100} \\ 11001 \\ \underline{-10100} \\ 10100 \\ \underline{-10100} \ \checkmark \end{array}$$

$111001,01_2 = 57,25_{10}$ ✓

(3 × 6) (18)

2.2 2.2.1 $213_{10} = 11010101_2$ ✓

$1+1+0+1+0+1+0+1$ ✓
$\downarrow \ \downarrow \ \downarrow \ \downarrow \ \downarrow \ \downarrow \ \downarrow \ \downarrow$
1 0 1 1 1 1 1 1 ✓

(3)

2.2.2 0111 0110 ✓
= 36_{10} ✓ (2)

2.2.3 35_{10}
= 0110 ✓1000 ✓ (2)
[25]

VRAAG 3

3.1 3.1.1

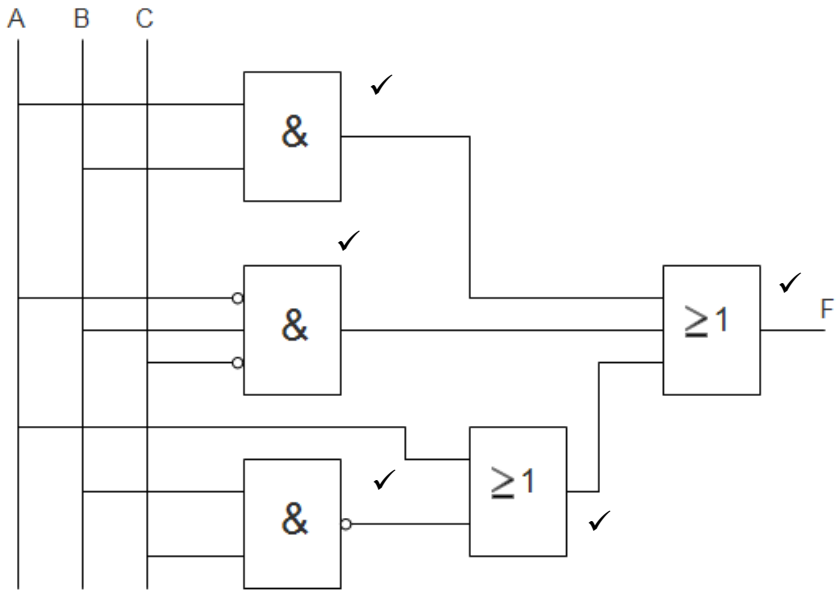

3.1.2

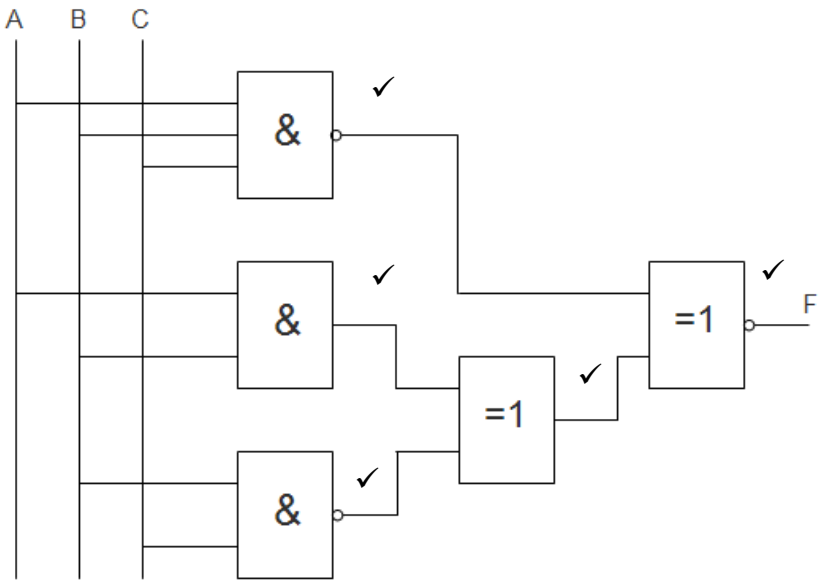

3.1.3

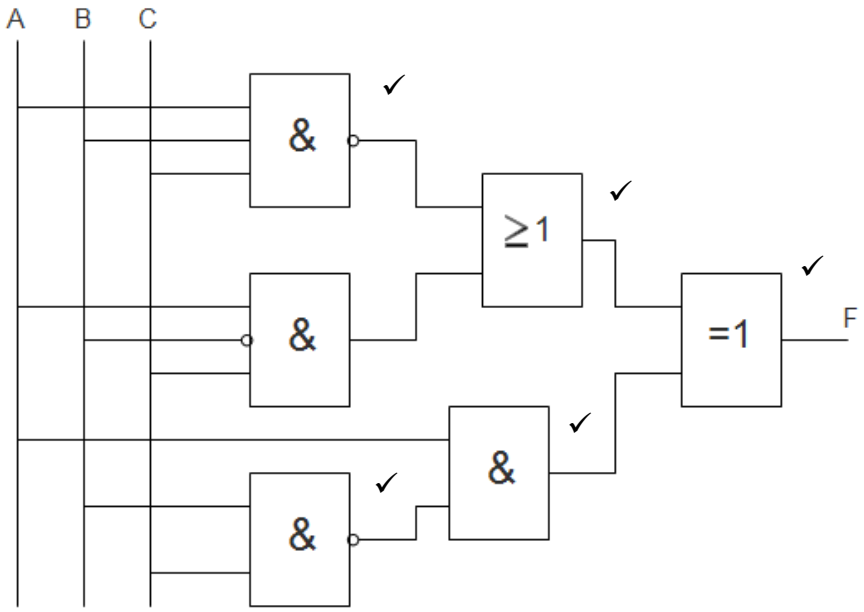

(3 × 5) (15)

3.2 3.2.1

$$F = \overline{\overline{(\bar{A}B + ABC)(\bar{A}BC + ABC)}}\ \overline{\overline{(\bar{A}B + ABC)}}$$

$$= (\bar{A}B + ABC)(\bar{A}BC + ABC) + \bar{A}B + ABC \quad \surd$$

$$= \bar{A}BC + ABC + \bar{A}B + ABC \quad \surd$$

$$= \bar{A}BC + \bar{A}B + ABC \quad \surd$$

$$= \bar{A}B + ABC \quad \surd$$

$$= B(\bar{A} + AC)$$

$$= B(\bar{A} + C)$$

$$= \bar{A}B + BC \quad \surd$$

$$= \overline{\overline{\bar{A}B + BC}}$$

$$= \overline{\overline{\bar{A}B}.\overline{BC}} \quad \surd$$

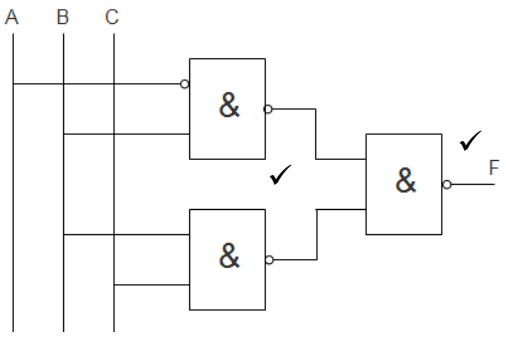

3.2.2 $F = AB + \overline{\overline{A}B\overline{C} + A\overline{B} + \overline{A}C}$

$= AB + \overline{\overline{A}B\overline{C}} \cdot \overline{A\overline{B}} \cdot \overline{\overline{A}C}$ √

$= AB + (A + \overline{B} + C)(\overline{A} + B)(A + \overline{C})$

$= AB + (AB + \overline{A}\overline{B} + \overline{A}C + BC)(A + \overline{C})$ √

$= AB + AB + ABC + AB\overline{C} + \overline{A}\overline{B}\overline{C}$ · √

$= AB + \overline{A}\overline{B}\overline{C}$ ✓½

$= \overline{\overline{AB + \overline{A}\overline{B}\overline{C}}}$ √

$= \overline{\overline{AB}} \cdot \overline{\overline{A}\overline{B}\overline{C}}$ √

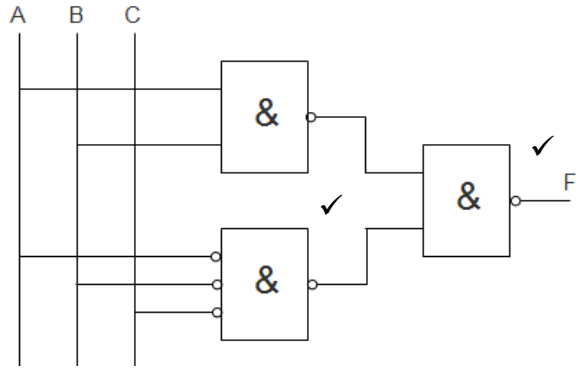

✓ ✓ ✓

(2 × 5) (10)
[25]

VRAAG 4

A	B	C	S_A	R_A	S_B	R_B	S_C	R_C
1	1	1	Ø	0	Ø	0	0	1
1	1	0	Ø	0	0	1	1	0
1	0	1	0	1	1	0	Ø	0
0	1	1	0	Ø	0	1	Ø	0
0	0	1	0	Ø	0	Ø	0	1
0	0	0	1	0	1	0	1	0

✓ ✓ ✓

010 – Ø 100 – Ø

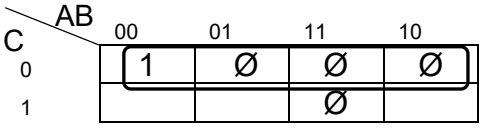

$S_A = C$ ✓

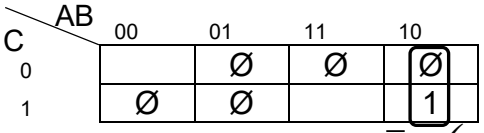

$R_A = A\bar{B}$ ✓

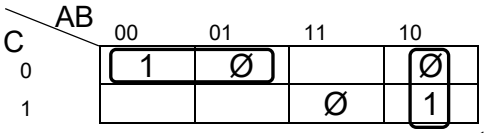

$S_B = \bar{A} + B\bar{C}$ ✓

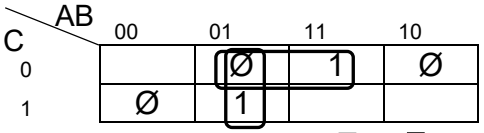

$R_B = \bar{A}B + \bar{C}$ ✓

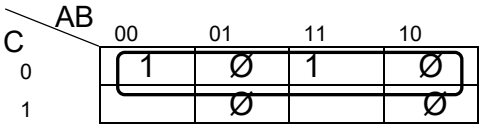

$S_C = \bar{C}$ ✓

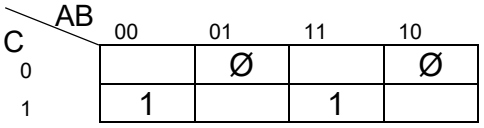

$R_C = \bar{A}\bar{B}C + ABC$

$= C(\bar{A}\bar{B} + AB)$ ✓

$= C(\overline{A \oplus B})$ ✓

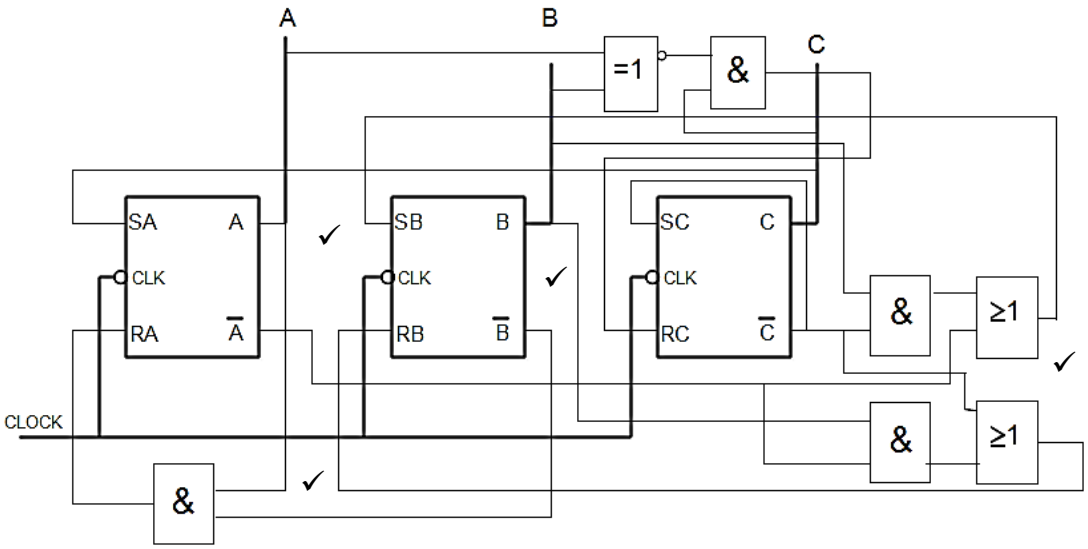

[20]

VRAAG 5

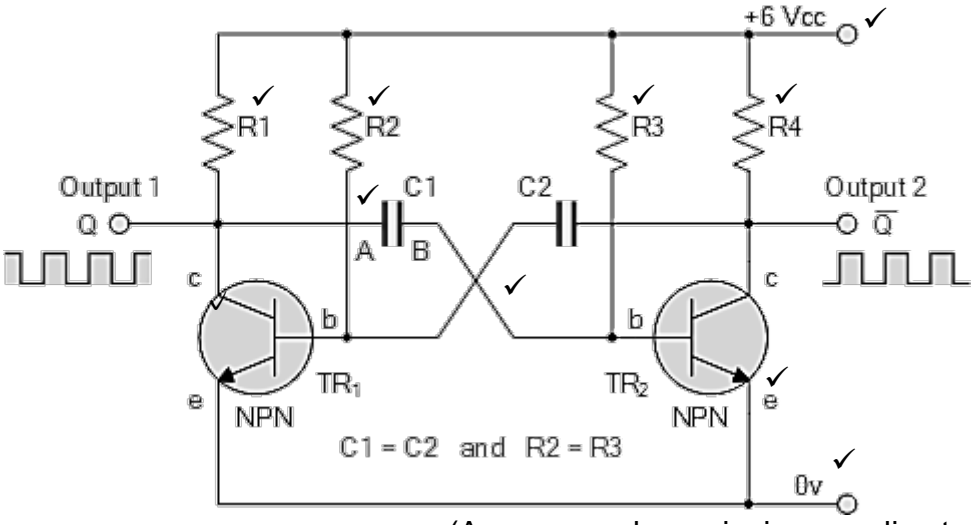

(Aanvaar ander variasies van die stroombaan) **[10]**

TOTAAL: 100

Kopiereg voorbehou