higher education & training

Department:
Higher Education and Training
REPUBLIC OF SOUTH AFRICA

# NASIENRIGLYN

## NASIONALE SERTIFIKAAT

## LOGIKASTELSELS N4

## 9 APRIL 2018

**Hierdie nasienriglyn bestaan uit 7 bladsye.**

Kopiereg voorbehou

## VRAAG 1

1.1
1.1.1 Onwaar
1.1.2 Onwaar
1.1.3 Onwaar
1.1.4 Waar
1.1.5 Waar

(5 × 1) (5)

1.2
1.2.1 'n Boolsekompliment is die teenoorgestelde van 'n veranderlike ✓ omdat die compliment aangedui word deur 'n oorloopstaaf oor die veranderlike ('over-bar over the variable').✓

1.2.2 Uitlaai/Uitswaai is die maksimum getal standaardtoevoere wat betroubaar deur een toevoer bedryf kan word.

1.2.3 Geraasimmuniteit is die hoeveelheid geraas op die toevoer van die logikahek sonder dat dit die afvoer van die logikastatus sal beïnvloed.

1.2.4 Boolse veranderlike is 'n simbool wat gebruik word wat die aksie, kondisie of data verteenwoordig ✓ en die veranderlike kan slegs 'n waarde hê van 1 of 0.✓

(4 × 2) (8)

1.3

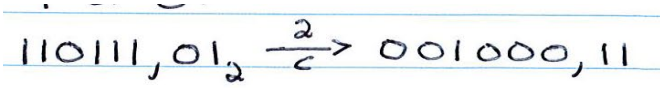


(1)

1.4

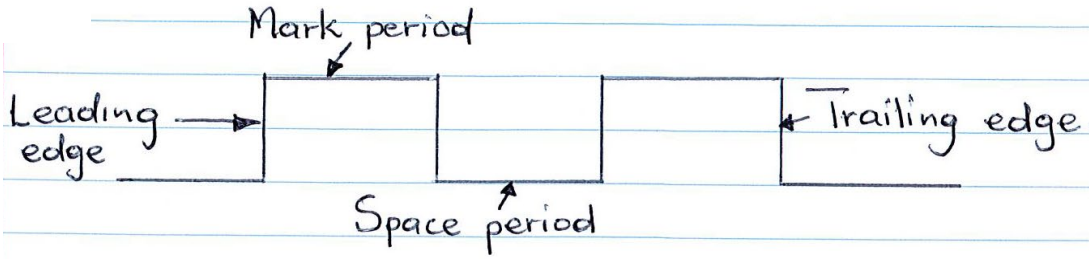


(4)

1.5
- Binêregetalstelsel
- Basis = 2

(2)
**[20]**

## VRAAG 2

2.1 2.1.1

$9{,}25_{10} = 1001{,}01_2$ ✓ $6{,}5_8 = 110{,}101_2$ ✓

$0110{,}101 \quad 0110{,}101$

$-1001{,}010 \quad \frac{1}{c} \quad 0110{,}101$ ✓

$\square \; 1101{,}010$

No carry, compliment answer ✓

$1101{,}010 - 0010{,}101_2 = 1\times2^1 + 0\times2^0 + 1\times2^{-1} + 1\times2^{-3}$

$= 2{,}625_{10}$ ✓✓

2.1.2

$13{,}5_8 = 1011{,}101_2$ ✓ $5{,}25_{10} = 101{,}01_2$ ✓

$0110{,}101 \quad 0110{,}101$

$-1001{,}010 \quad \frac{1}{c} \quad 0110{,}101$ ✓

$\square \; 1101{,}010$

No carry, compliment answer ✓

$1101{,}010 - 0010{,}101_2 = 1\times2^1 + 0\times2^0 + 1\times2^{-1} + 1\times2^{-3}$

$= 2{,}625_{10}$ ✓✓

2.1.3

$14{,}75_{10} = 1110{,}11_2$ ✓ $6{,}4_8 = 110{,}1_2$ ✓

$10{,}010_2$ ✓

$1101 \,\overline{)\,11101{,}100}$

$-1101$

$1110$ ✓

$-1101$

$10$

$10{,}010_2 = 010{,}010$ ✓

$421 \quad 421$

$= 2{,}2_8$ ✓

(3 × 6) (18)

2.2 2.2.1

5 , 3 5
8421 8421 8421
0101 , 0011 0101 8421BCD

2.2.2

5 , 3 5
2421 2421 2421
1011 , 0011 1011 2421BCD

(2 × 3) (6)

2.3

\# = 0100011
L = 1001100
O = 1001111
G = 1000111
I = 1001001
C = 1000011

(6)
**[30]**

## VRAAG 3

3.1

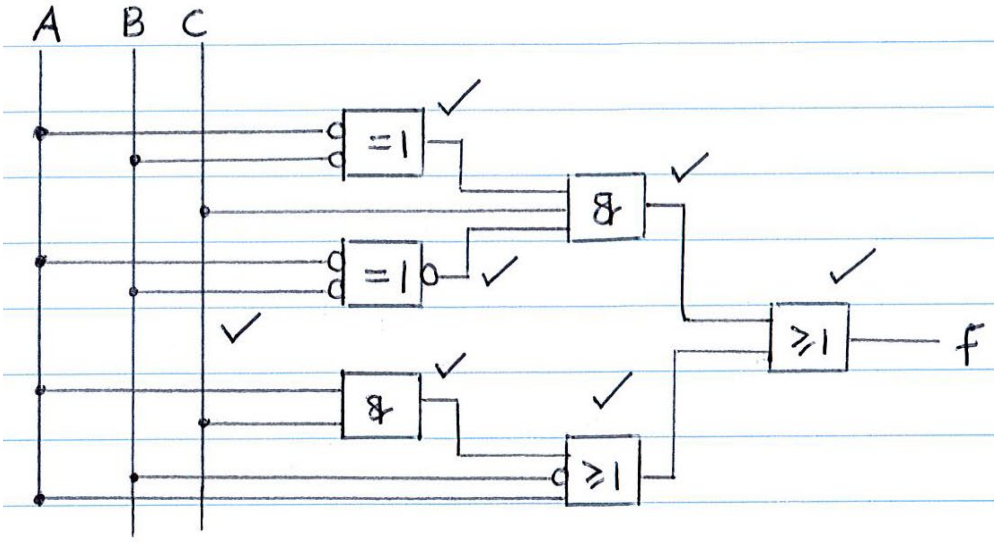


(7)

3.2 3.2.1

| A | B | A⊕B | |
|---|---|---|---|
| 0 | 0 | 0 | ✓ |
| 0 | 1 | 1 | |
| 1 | 0 | 1 | |
| 1 | 1 | 0 | |

(1)

3.2.2

$\bar{A}B + A\bar{B} + A\bar{A} + B\bar{B}$ ✓

$\bar{A}B + A\bar{A} + A\bar{B} + B\bar{B}$ ✓

$\bar{A}(A+B) + \bar{B}(A+B)$ ✓

$(\bar{A}+\bar{B})(A+B)$ ✓

$(\overline{AB})(A+B)$ ✓

$A\overline{AB} + B\overline{AB}$ ✓

(6)

3.2.3

$$\overline{A\overline{AB} + B\overline{AB}}$$

$$\overline{A\overline{AB}} \cdot \overline{B\overline{AB}}$$

(2)

3.2.4

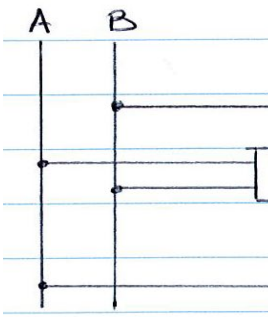


(4)
**[20]**

## VRAAG 4

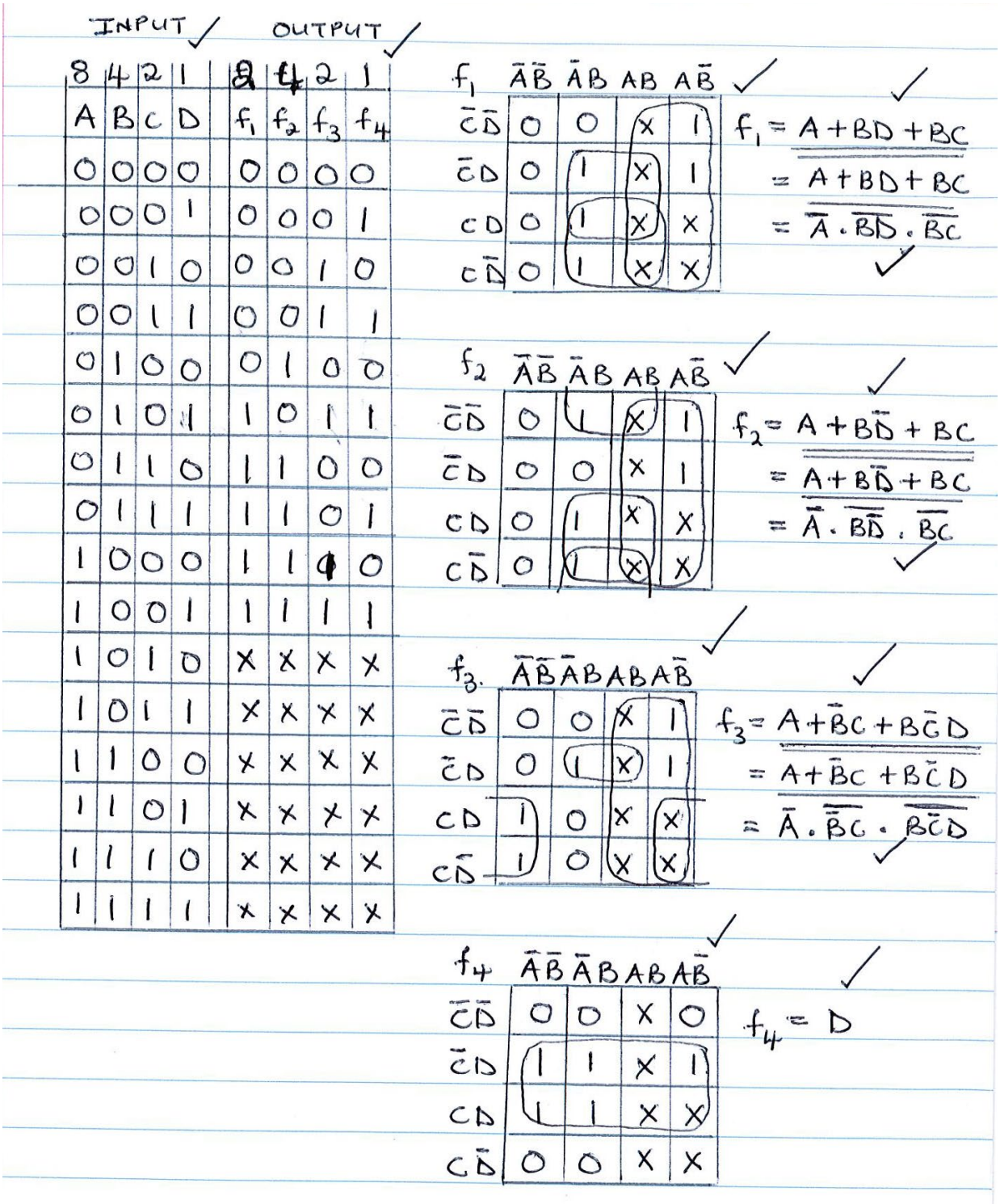

INPUT ✓ OUTPUT ✓

| 8 | 4 | 2 | 1 | 8 | 4 | 2 | 1 |
|---|---|---|---|---|---|---|---|
| A | B | C | D | $f_1$ | $f_2$ | $f_3$ | $f_4$ |
| 0 | 0 | 0 | 0 | 0 | 0 | 0 | 0 |
| 0 | 0 | 0 | 1 | 0 | 0 | 0 | 1 |
| 0 | 0 | 1 | 0 | 0 | 0 | 1 | 0 |
| 0 | 0 | 1 | 1 | 0 | 0 | 1 | 1 |
| 0 | 1 | 0 | 0 | 0 | 1 | 0 | 0 |
| 0 | 1 | 0 | 1 | 1 | 0 | 1 | 1 |
| 0 | 1 | 1 | 0 | 1 | 1 | 0 | 0 |
| 0 | 1 | 1 | 1 | 1 | 1 | 0 | 1 |
| 1 | 0 | 0 | 0 | 1 | 1 | 0 | 0 |
| 1 | 0 | 0 | 1 | 1 | 1 | 1 | 1 |
| 1 | 0 | 1 | 0 | X | X | X | X |
| 1 | 0 | 1 | 1 | X | X | X | X |
| 1 | 1 | 0 | 0 | X | X | X | X |
| 1 | 1 | 0 | 1 | X | X | X | X |
| 1 | 1 | 1 | 0 | X | X | X | X |
| 1 | 1 | 1 | 1 | X | X | X | X |

$f_1$

| | $\bar{A}\bar{B}$ | $\bar{A}B$ | $AB$ | $A\bar{B}$ |
|---|---|---|---|---|
| $\bar{C}\bar{D}$ | 0 | 0 | X | 1 |
| $\bar{C}D$ | 0 | 1 | X | 1 |
| $CD$ | 0 | 1 | X | X |
| $C\bar{D}$ | 0 | 1 | X | X |

$f_1 = A + BD + B\bar{C}$ ✓
$= \overline{A + BD + B\bar{C}}$
$= \overline{A} \cdot \overline{BD} \cdot \overline{B\bar{C}}$ ✓

$f_2$

| | $\bar{A}\bar{B}$ | $\bar{A}B$ | $AB$ | $A\bar{B}$ |
|---|---|---|---|---|
| $\bar{C}\bar{D}$ | 0 | 1 | X | 1 |
| $\bar{C}D$ | 0 | 0 | X | 1 |
| $CD$ | 0 | 1 | X | X |
| $C\bar{D}$ | 0 | 1 | X | X |

$f_2 = A + B\bar{D} + B\bar{C}$ ✓
$= \overline{A + B\bar{D} + B\bar{C}}$
$= \overline{A} \cdot \overline{B\bar{D}} \cdot \overline{B\bar{C}}$ ✓

$f_3$

| | $\bar{A}\bar{B}$ | $\bar{A}B$ | $AB$ | $A\bar{B}$ |
|---|---|---|---|---|
| $\bar{C}\bar{D}$ | 0 | 0 | X | 1 |
| $\bar{C}D$ | 0 | 1 | X | 1 |
| $CD$ | 1 | 0 | X | X |
| $C\bar{D}$ | 1 | 0 | X | X |

$f_3 = A + \bar{B}C + B\bar{C}D$ ✓
$= \overline{A + \bar{B}C + B\bar{C}D}$
$= \overline{A} \cdot \overline{\bar{B}C} \cdot \overline{B\bar{C}D}$ ✓

$f_4$

| | $\bar{A}\bar{B}$ | $\bar{A}B$ | $AB$ | $A\bar{B}$ |
|---|---|---|---|---|
| $\bar{C}\bar{D}$ | 0 | 0 | X | 0 |
| $\bar{C}D$ | 1 | 1 | X | 1 |
| $CD$ | 1 | 1 | X | X |
| $C\bar{D}$ | 0 | 0 | X | X |

$f_4 = D$ ✓

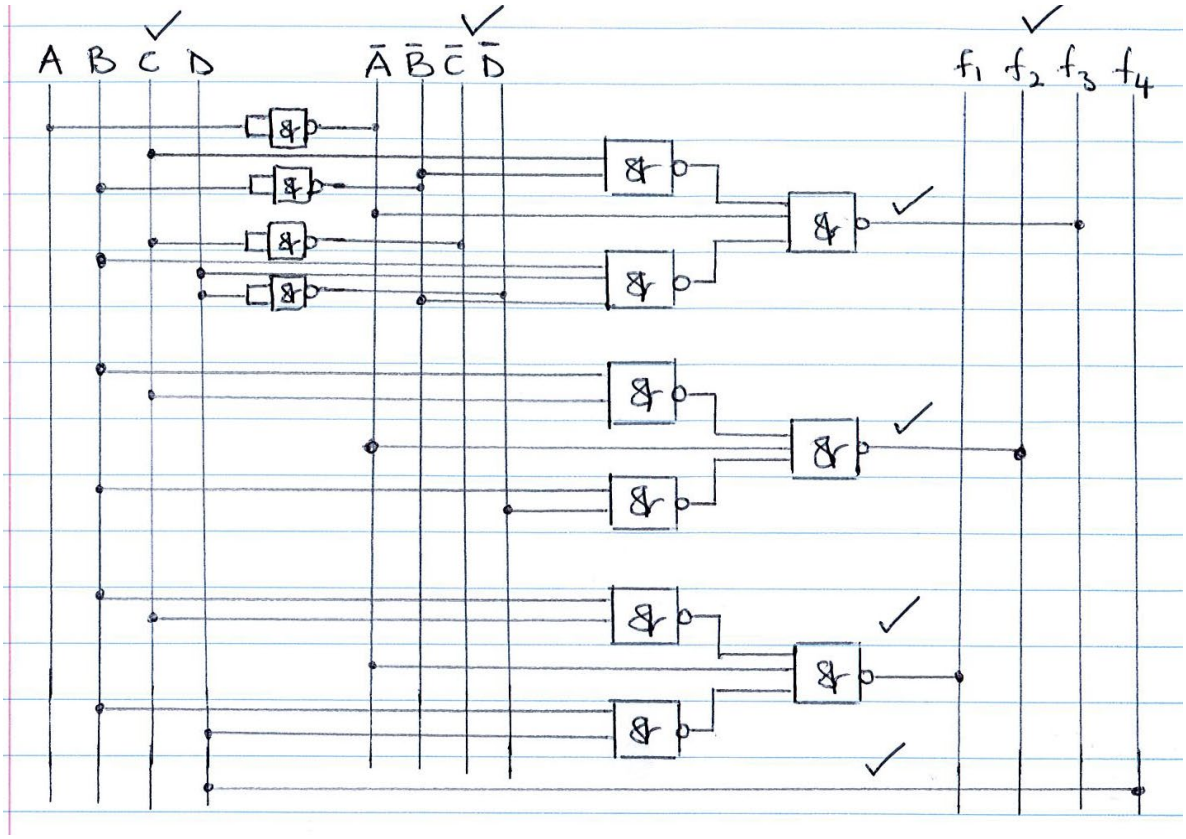


**[20]**

## VRAAG 5

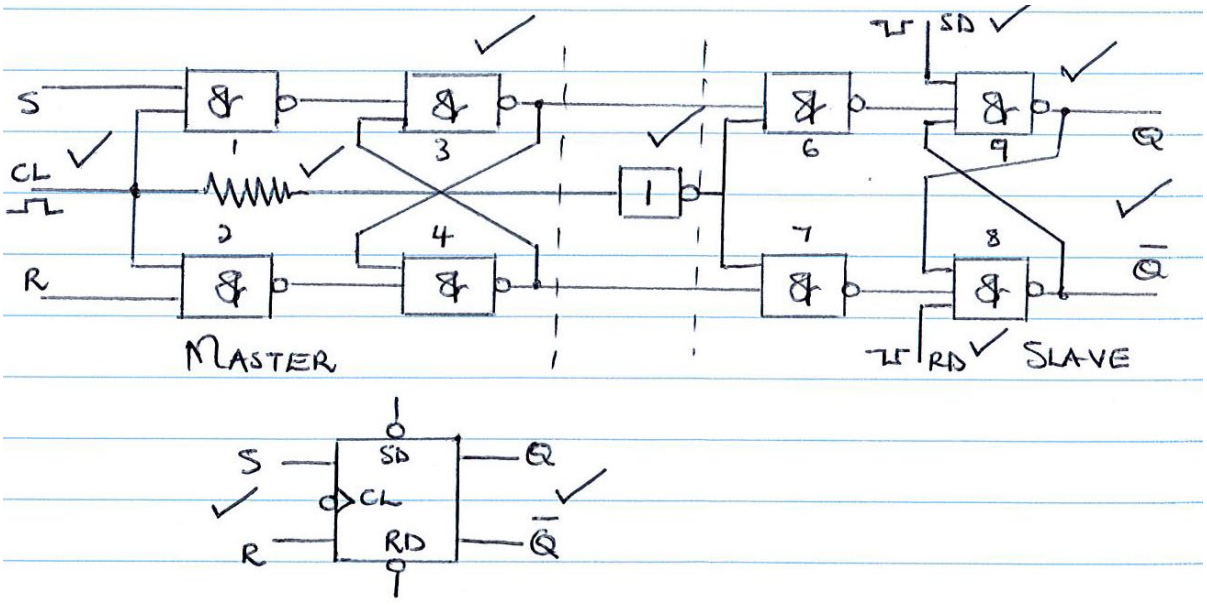


**[10]**

**TOTAAL: 100**

Kopiereg voorbehou