

higher education & training

Department:
Higher Education and Training
REPUBLIC OF SOUTH AFRICA

MARKING GUIDELINE

NATIONAL CERTIFICATE

NOVEMBER EXAMINATION

LOGIC SYSTEMS N4

11 Novermber 2014

This marking guideline consists of 7 pages.

Copyright reserved

QUESTION 1

1.1 2421 CODE ✓ (1)

1.2 1 ✓ (1)

1.3 P_1 = 1, 3, 5, 7 ✓
P_2 = 2, 3, 6, 7 ✓
P_3 = 4, 5, 6, 7 ✓ (3)

1.4 GRAY CODE ✓ (1)

1.5

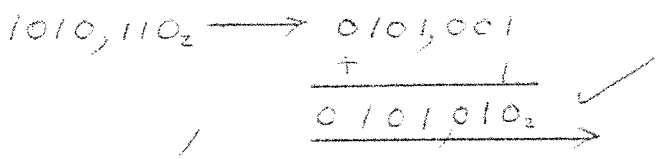

(1)

1.6

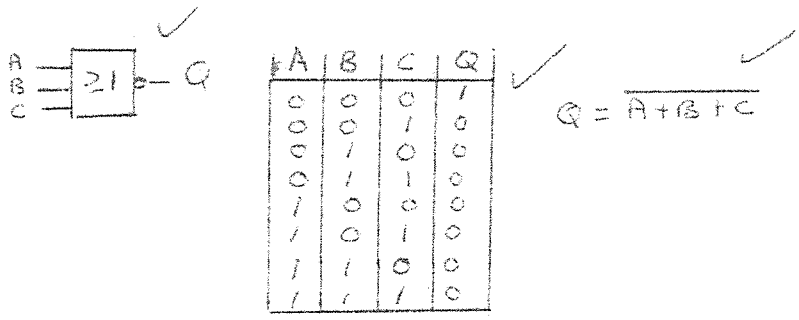

(3)

1.7 1.7.1 True ✓
1.7.2 False ✓
1.7.3 True ✓
1.7.4 True ✓
1.7.5 True ✓
(5 × 1) (5)

1.8 (i) Groups must be as large as possible. ✓
(ii) Use as few groups as possible. ✓
(iii) Group the 1's together. ✓
(iv) Groups may overlap. ✓
(v) Groups horizontal and/or vertical. ✓ (5)

1.9 1.9.1 Fast switching ✓

1.9.2 To produce a square wave output. ✓ (2)
[22]

Copyright reserved

QUESTION 2

2.1

$A,C_{16} = 1010,1100_2 \rightarrow 1010,1100$

$15,4_8 = 1101,1000 \xrightarrow{1's\,C} 0010,0111$

$1101,0011$

NO CARRY GET 1'S COMPL. $- 0010,1100$

SIGN NEGATIVE. $= - 2,75_{10}$

(6)

2.2

$E,3_{16} = 1110,0011_2$

$5,25_{10} = 101,01_2$

$10,1011 = 2,54_8$

$1010100 \,|\, 11100011,0000$

-1010100

001110110

-1010100

010001000

-1010100

001101000

(6)

(6)

2.3

$6,5_8 = 110,101_2$

$4,75_{10} = 100,11_2$

$110,101$

$\times 100,11$

110101

1101010

1101010000

$11111,01111_2 = 1F,78_{16}$

(6)

2.4

$9_{10} = 1001_2$.

1	2	3	4	5	6	7
P1	P2	D1	P3	D2	D3	D4
0	0	1	1	0	0	1

$P_1 = 1, 3, 5, 7$

$P_2 = 2, 3, 6, 7$

$P_3 = 4, 5, 6, 7$

$TX = 0011001_{HAMMING}$.

(6)

2.5 2.5.1 $2421 = 1101\ 1100,1111_{2421}$

2.5.2 $X3 = 1010\ 1001,1100_{X3}$

(3 × 2) (6)

[30]

QUESTION 3

3.1 3.1.1

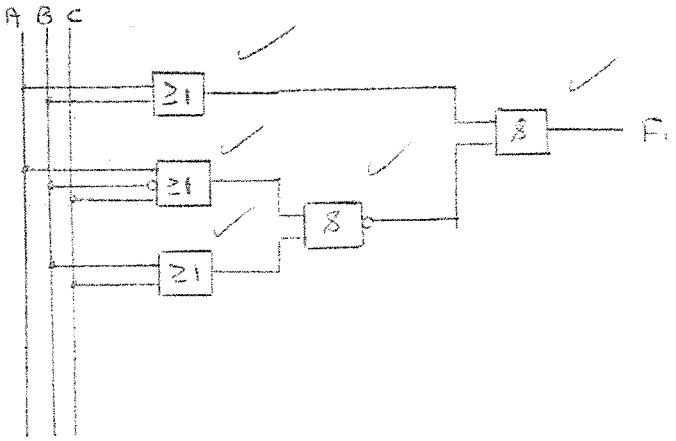

3.1.2

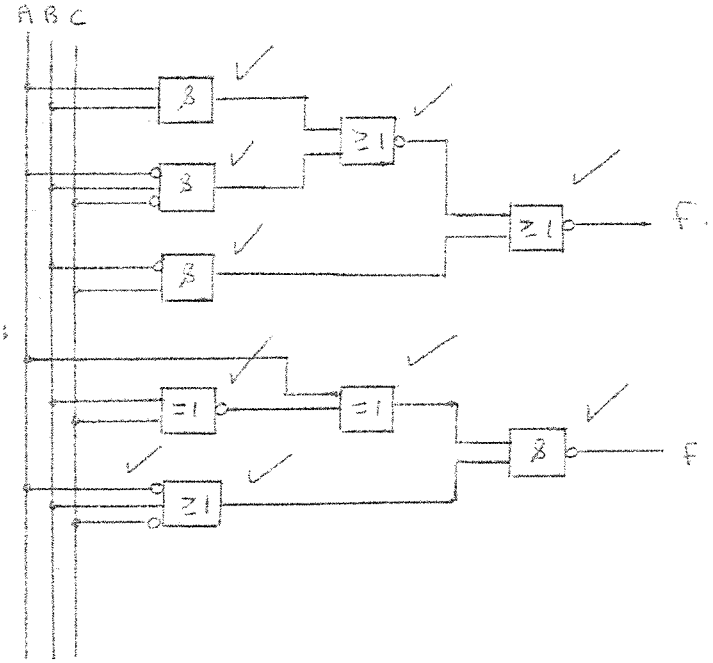

3.1.3

(3 × 5) (15)

3.2 3.2.1

$$(A+B)\{\bar{A}(\bar{B}+\bar{C})\} + A\bar{B} + \bar{A}C = F$$
$$= (A+B)\{\bar{A}\bar{B} + \bar{A}\bar{C}\} + A\bar{B} + \bar{A}C$$
$$= 0 + 0 + 0 + \bar{A}B\bar{C} + A\bar{B} + \bar{A}C$$
$$= \bar{A}(B\bar{C} + C) + A\bar{B}$$
$$= \bar{A}B + \bar{A}C + A\bar{B}$$

TO NANDS.

$$\overline{\bar{A}B + \bar{A}C + A\bar{B}}$$
$$= \overline{\bar{A}B} \cdot \overline{\bar{A}C} \cdot \overline{A\bar{B}}$$

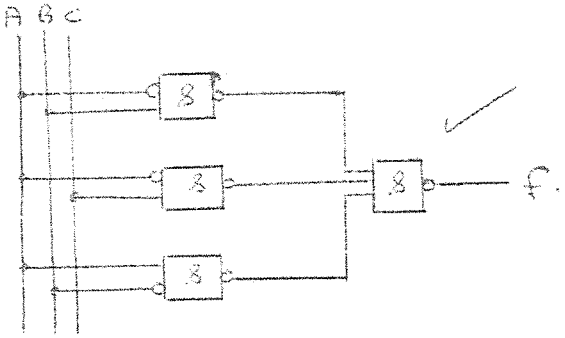

3.2.2

$$\overline{\overline{(AB + A\bar{B}C)}\,\overline{(A\bar{B}C + \bar{A}B\bar{C})}\,\overline{(AB + A\bar{B}C)}} = F$$
$$= (AB + A\bar{B}C) + (A\bar{B}C + \bar{A}B\bar{C})(AB + A\bar{B}C)$$
$$= AB + A\bar{B}C$$
$$= A(B + \bar{B}C)$$
$$= A(B + C)$$
$$= AB + AC$$

TO NANDS.

$$\overline{\overline{AB + AC}}$$
$$= \overline{\overline{AB} \cdot \overline{AC}}$$

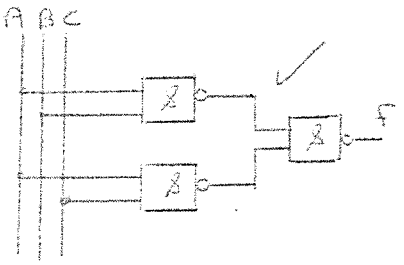

(2 × 5) (10)
[25]

QUESTION 4

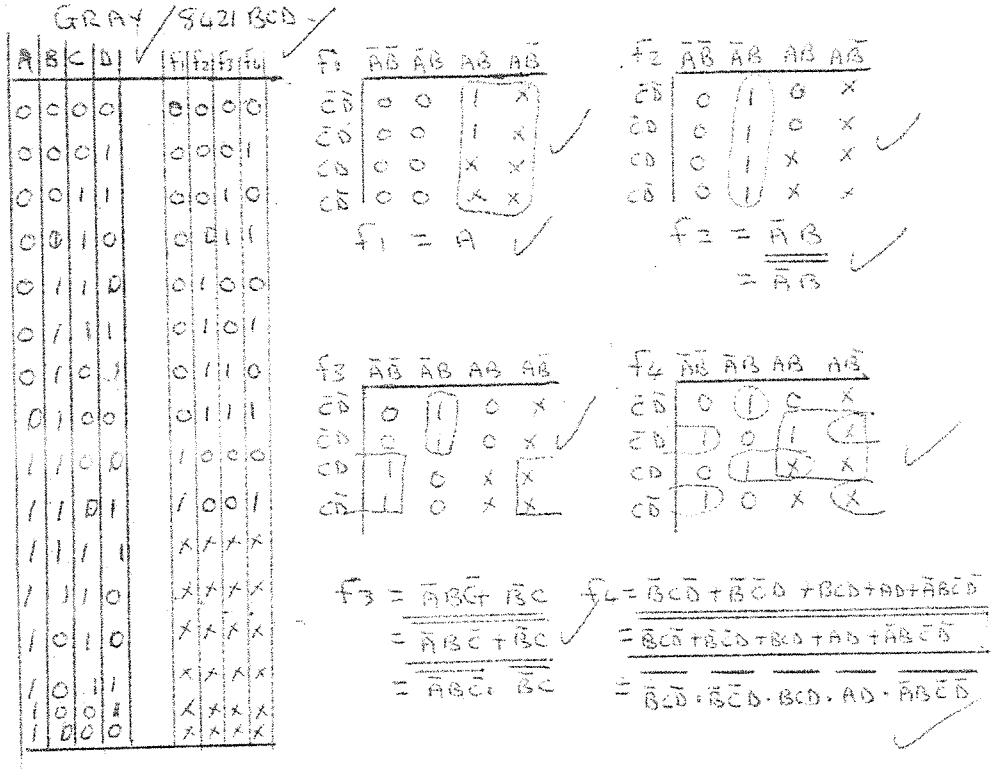

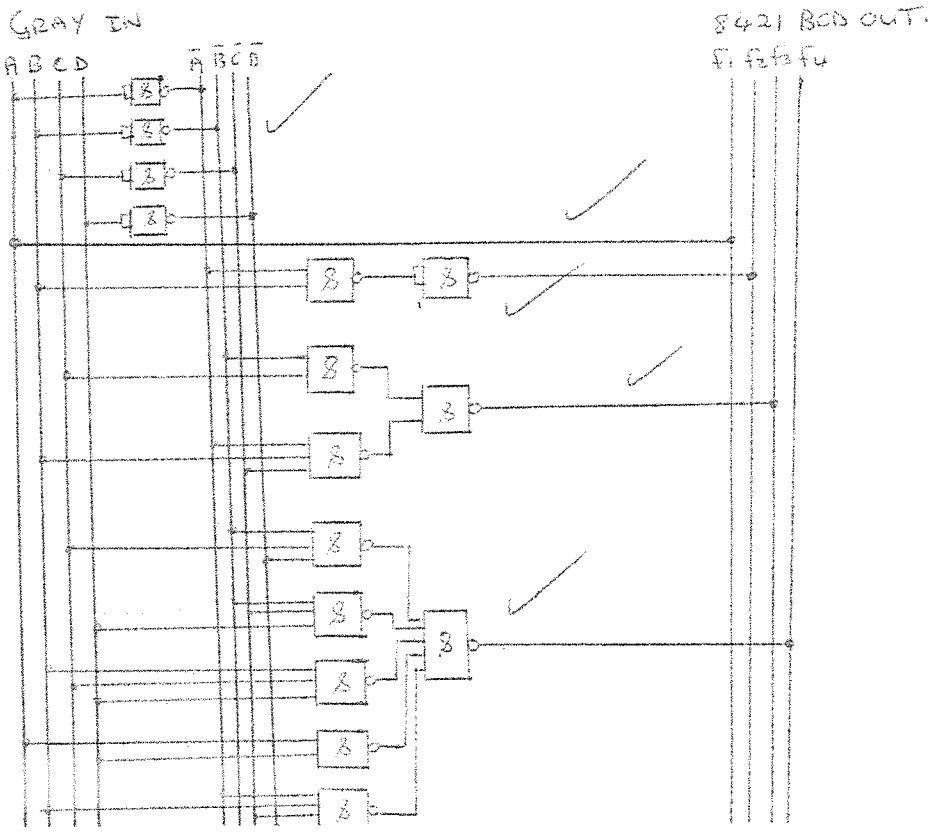

[15]

Copyright reserved

QUESTION 5

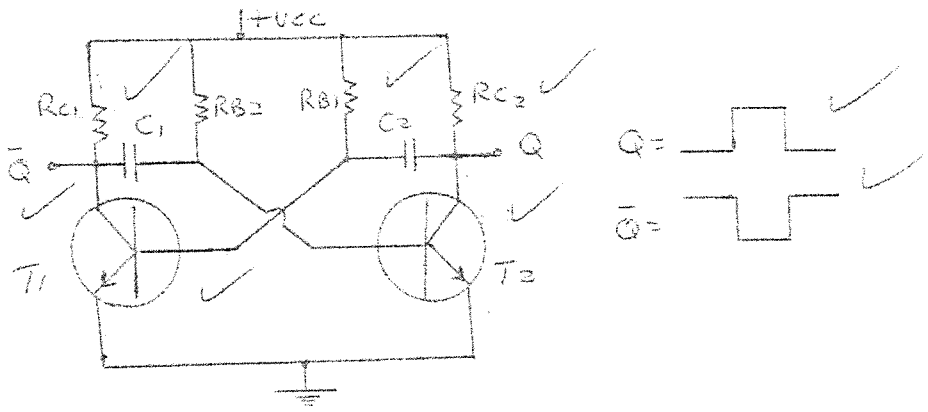

[8]

TOTAL: 100

Copyright reserved