higher education & training

Department:
Higher Education and Training
REPUBLIC OF SOUTH AFRICA

MARKING GUIDELINE

NATIONAL CERTIFICATE

APRIL EXAMINATION

LOGIC SYSTEMS N4

24 MARCH 2014

This marking guideline consists of 7pages.

Copyright reserved

QUESTION 1

1.1 0, 1, 2, 3, 4, 5, 6, 7, 8, 9, A, B, C, D, E, F✓ (1)

1.2 9✓ (1)

1.3 Error detection ✓ in data transmission✓ (2)

1.4 X – 3 BCD✓ (1)

1.5 1 001,1 012 ⟶ 0110,010 − 1 ✓ = 0110,011 (1)

1.6 ✓



A	B	Q
0	0	0
0	1	1
1	0	1
1	1	0

✓

$Q = A \oplus B$ ✓
OR $\bar{A}B + A\bar{B}$

(3)

1.7 1.7.1 1✓

1.7.2 $A\bar{B}$

1.7.3 1✓

1.7.4 1✓

(4 × 1) (4)

1.8 (i) Groups must be as large as possible✓

(ii) Use as few groups as possible✓

(iii) Group the 1's together✓

(iv) Groups may overlap✓

(v) Group horizontal and/or vertical✓

(5 × 1) (5)

Copyright reserved

1.9 1.9.1

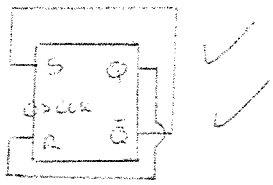

1.9.2

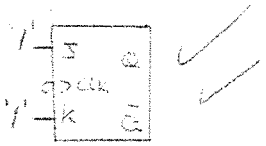

1.9.3

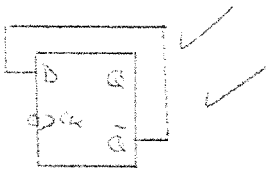

(3 × 2) (6)
[24]

QUESTION 2

2.1 2.1.1 $14,5_8 = 1100,1012$✓ → 1100,101

2's C

$E,6_{16} = 1110,01102$✓ → 0001,101✓

1

1110,010✓

No carry get 2'sC for answer sign negative

0001,101

1

0001,110

2✓

$= -1,75_{10}$✓ (6)

2.1.2

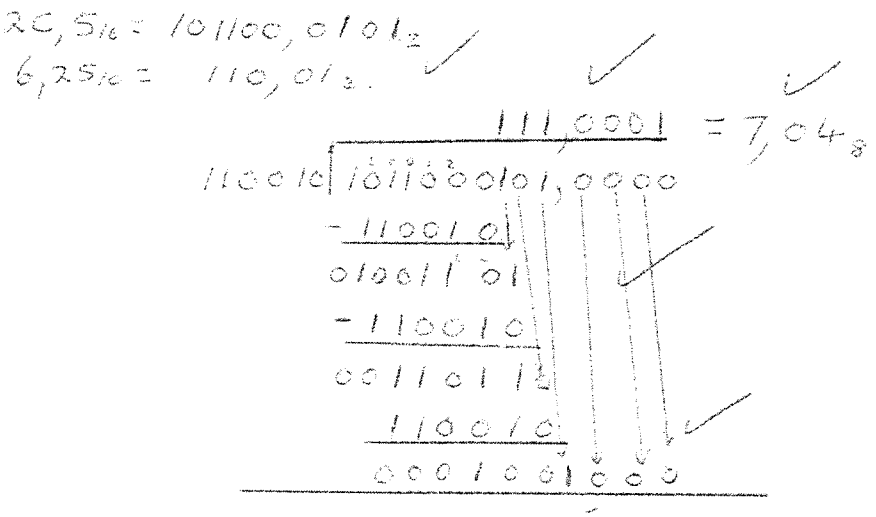

(6)

2.1.3

$12,125_{10} = 1100,001$
$5,4_8 = 101,100$

$1100,001_2$
$\times\ 101,1_2$
1100001
1100001
1100001
$100001010,1011$
$42,B_{16}$

(6)

2.2

$5_{10} = 0101_2$

1	2	3	4	5	6	7
P_1	P_2	D_1	P_3	D_2	D_3	D_4
0	1	0	0	1	0	1

$P_1 = 1, 3, 5, 7$
$P_2 = 2, 3, 6, 7$
$P_3 = 4, 5, 6, 7$

$TX = 0100101_{HAMMING}$

(6)

2.3 2.3.1 00101101,1111

2.3.2 01011010,1100

(2 × 3) (6)
[30]

Copyright reserved

QUESTION 3

3.1

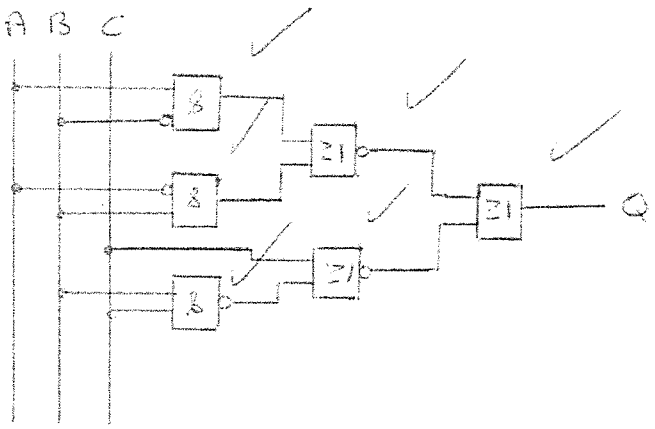

(6)

3.2 3.2.1

$$(AB+C)(\bar{A}C+B)(B+\bar{C}) = F$$

$$= (0 + AB + \bar{A}C + BC)(B+\bar{C})$$

$$= AB + AB\bar{C} + \bar{A}BC + 0 + BC + 0$$

$$= AB + BC$$

NA NEN:
TO NANDS:

$$\overline{\overline{AB + BC}}$$

$$= \overline{\overline{AB} \cdot \overline{BC}}$$

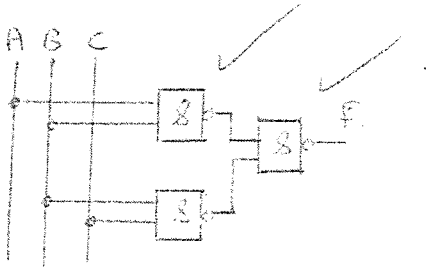

(6)

Copyright reserved

3.2.2

$$(AB\bar{C} + ABC)(\bar{A}BC + A\bar{B}C) = F$$
$$= (AB\bar{C} + ABC) + (\bar{A}BC + A\bar{B}C)$$
$$= AB(\bar{C} + C) + \bar{A}BC + A\bar{B}C$$
$$= AB + \bar{A}BC + A\bar{B}C$$
$$= A(B + \bar{B}C) + \bar{A}BC$$
$$= A(B + C) + \bar{A}BC$$
$$= AB + AC + \bar{A}BC$$
$$= AB + C(A + \bar{A}B)$$
$$= AB + C(A + B)$$
$$= AB + AC + BC$$

TO NANDS
NA NEN

$$\overline{AB + AC + BC}$$
$$= \overline{\overline{AB} \cdot \overline{AC} \cdot \overline{BC}}$$

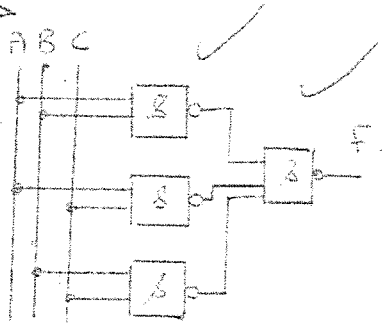

(6)
[18]

QUESTION 4

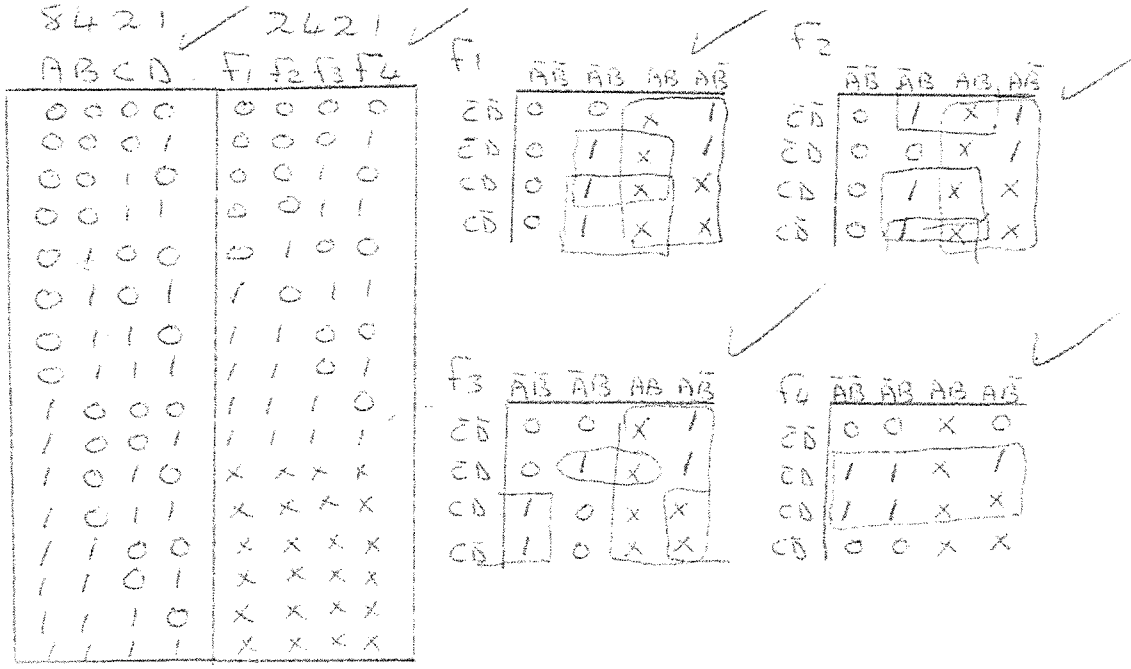

$F_1 = \overline{A + B\bar{D} + BC}$
$= \overline{A} \cdot \overline{B\bar{D}} \cdot \overline{BC}$

$F_2 = \overline{A + B\bar{D} + BC}$
$= \overline{A} \cdot \overline{B\bar{D}} \cdot \overline{BC}$

$F_3 = \overline{A + \bar{B}C + B\bar{C}D}$
$= \overline{A} \cdot \overline{\bar{B}C} \cdot \overline{B\bar{C}D}$

$F_4 = 0$

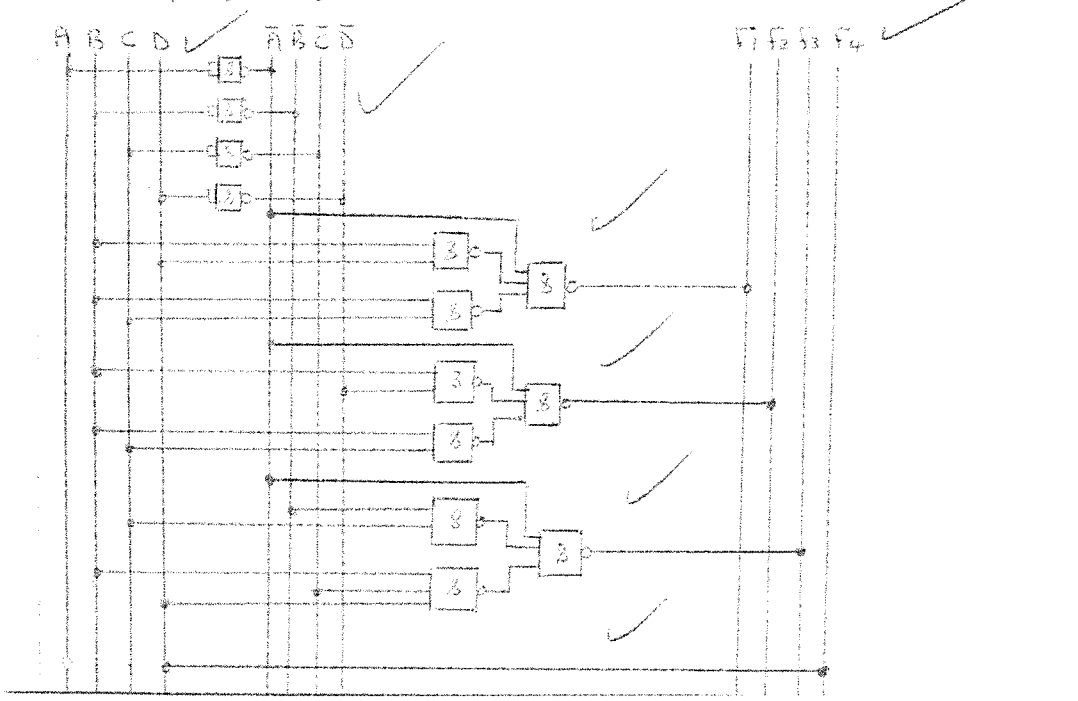

[20]

QUESTION 5

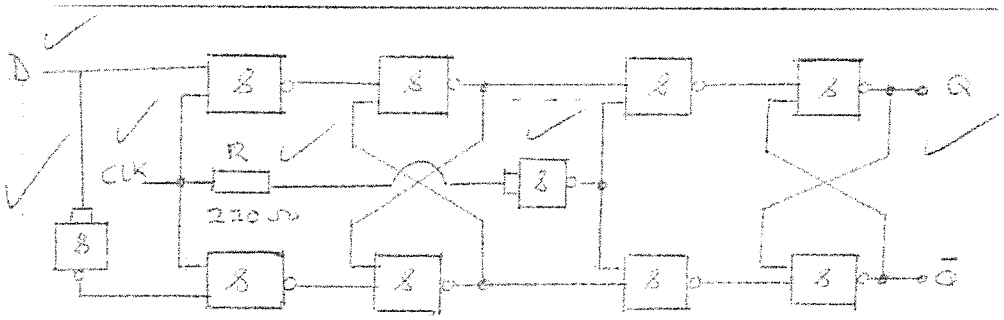

MASTER✓ SLAVE ✓

[8]

TOTAL: 100

Copyright reserved