higher education & training

Department:
Higher Education and Training
REPUBLIC OF SOUTH AFRICA

MARKING GUIDELINE

NATIONAL CERTIFICATE

AUGUST EXAMINATION

LOGIC SYSTEMS N4

21 JULY 2014

This marking guideline consists of 7 pages.

Copyright reserved

QUESTION 1

1.1 0,1 (1)

1.2 7 (1)

1.3 1, 2, 4 (1)

1.4 2421 or aiken (1)

1.5 $1110,100_2$ ⟶ 0001,011
1
0001,100 ⟶ (1)

1.6

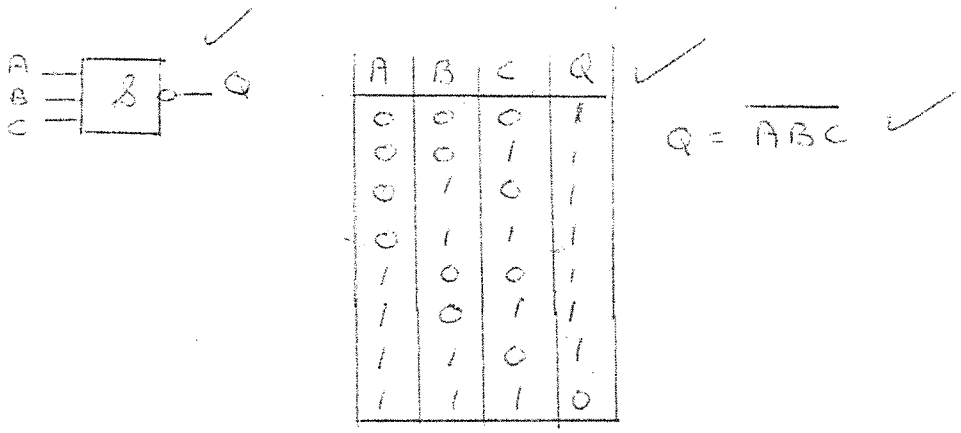

(3)

1.7 1.7.1 True
1.7.2 True
1.7.3 False
1.7.4 False
1.7.5 False

(5 x 1) (5)

1.8
- Groups must be as large as possible
- Use as few groups as possible
- Group the 1's together
- Groups may overlap
- Group horizontal and/or vertical

(5)

1.9 1.9.1

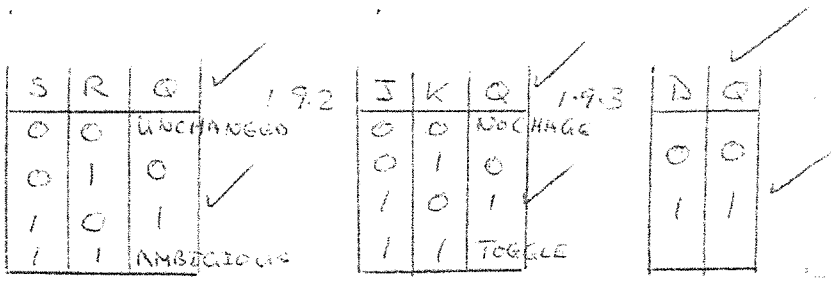

(3 x 2) (6)
[24]

QUESTION 2

2.1 $13,4_8 \longrightarrow 1011,100_2 \xrightarrow{\text{1's COMP}} 1011,1$
$E,8 \longrightarrow 1110,1000_2 \xrightarrow{\text{1's COMP}} \underline{0001,0}$
$1100,1 \xrightarrow{\text{1's COMP}} 0011,0 = -3_{10}$

No carry get 1's compl
Sign negative (6)

2.2 $B,5_{16} \longrightarrow 1011,0101_2$
$6,5_{10} \longrightarrow 110,1_{,2}$

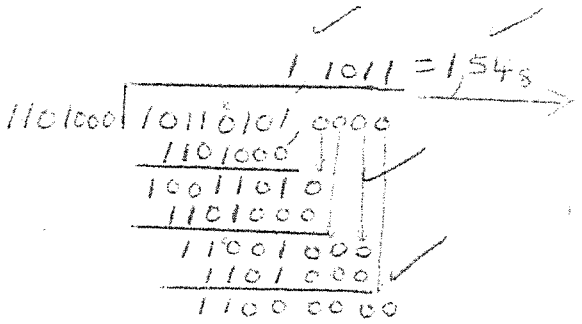

(6)

2.3 $7,125_{10} \times 6,4_8$
$7,125_{10} \longrightarrow 111,001_2$
$6,4_8 \longrightarrow 110,100_2$

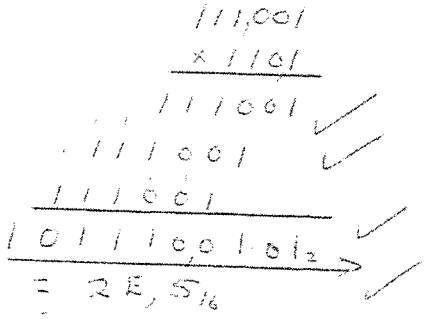

(6)

2.4

1	2	3	4	5	6	7
P_1	P_2	D_1	P_3	D_2	D_3	D_4
1	1	0	0	1	1	0

$P_1 = 1, 3, 5, 7$
$P_2 = 2, 3, 6, 7$
$P_3 = 4, 5, 6, 7$

$6_{10} = 0110_2$
$TX = 1100110_{HAMMING}$

(6)

2.5 $46,3_{10}$

2.5.1 $01001100,0011_{2421}$

2.5.2 $01111001,0110_{x-3}$ (2 x 3) (6)
[30]

Copyright reserved

QUESTION 3

3.1

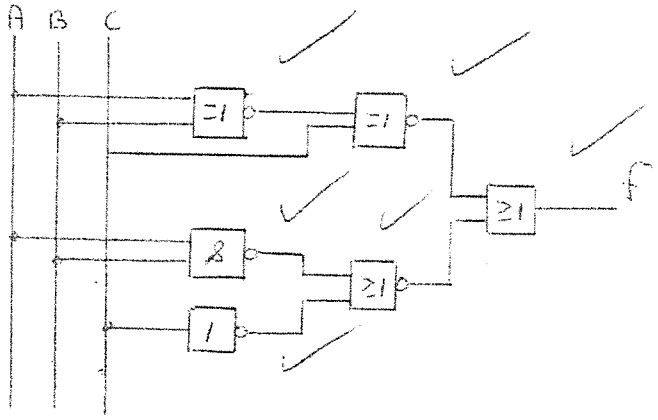

(6)

3.2 3.2.1

$\bar{A}BC + \bar{A}\bar{C} + AB\bar{C}\bar{D} + ABD + ABC\bar{D} = F$

$\bar{A}(BC + \bar{C}) + AB\bar{C}\bar{D} + AB(D + C\bar{D})$

$\bar{A}(B + \bar{C}) + AB\bar{C}\bar{D} + AB(D + C)$

$\bar{A}B + \bar{A}\bar{C} + AB\bar{C}\bar{D} + ABD + ABC$

$B(\bar{A} + AD) + AB(\bar{C}\bar{D} + C) + \bar{A}\bar{C}$

$B(\bar{A} + D) + AB(\bar{D} + C) + \bar{A}\bar{C}$

$\bar{A}B + BD + AB\bar{D} + ABC + \bar{A}\bar{C}$

$B(\bar{A} + AC) + B(D + A\bar{D}) + \bar{A}\bar{C}$

$B(\bar{A} + C) + B(D + A) + \bar{A}\bar{C}$

$\bar{A}B + BC + BD + AB + \bar{A}\bar{C}$

$B(A + \bar{A}) + BD + AB + \bar{A}\bar{C}$

$= B + \bar{A}\bar{C}$

TO NANDS:

$B + \bar{A}\bar{C}$

$= \overline{\bar{B} \cdot \overline{\bar{A}\bar{C}}}$

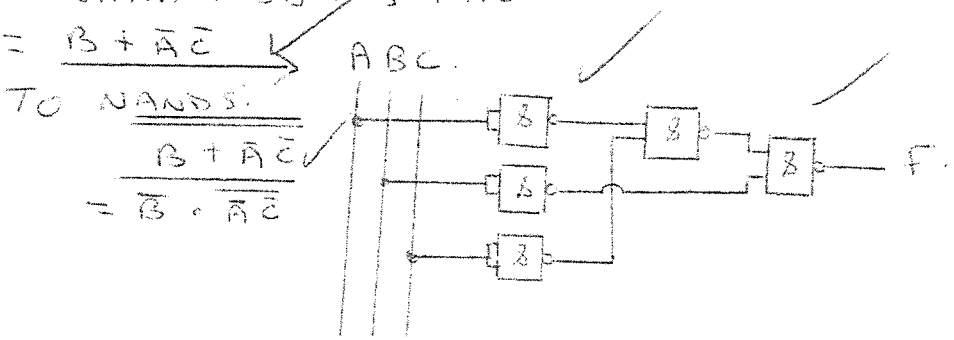

(8)

3.2.2

$$\overline{(AB\bar{C} + A\bar{B}C)}\,\overline{(\bar{A}BC + \bar{A}\bar{B}C)} = f$$

$$= AB\bar{C} + A\bar{B}C + \bar{A}BC + \bar{A}\bar{B}C$$

$$= AB\bar{C} + \bar{A}BC$$

TO NANDS.

$$\overline{AB\bar{C} + \bar{A}BC}$$

$$= \overline{AB\bar{C}} \cdot \overline{\bar{A}BC}$$

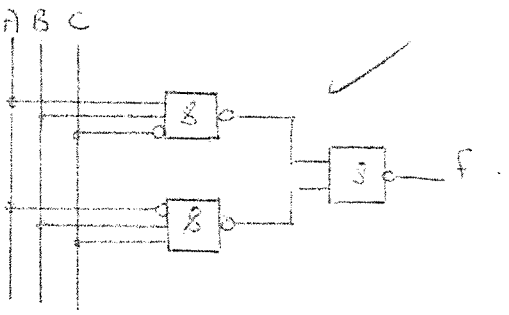

(4)
[18]

QUESTION 4

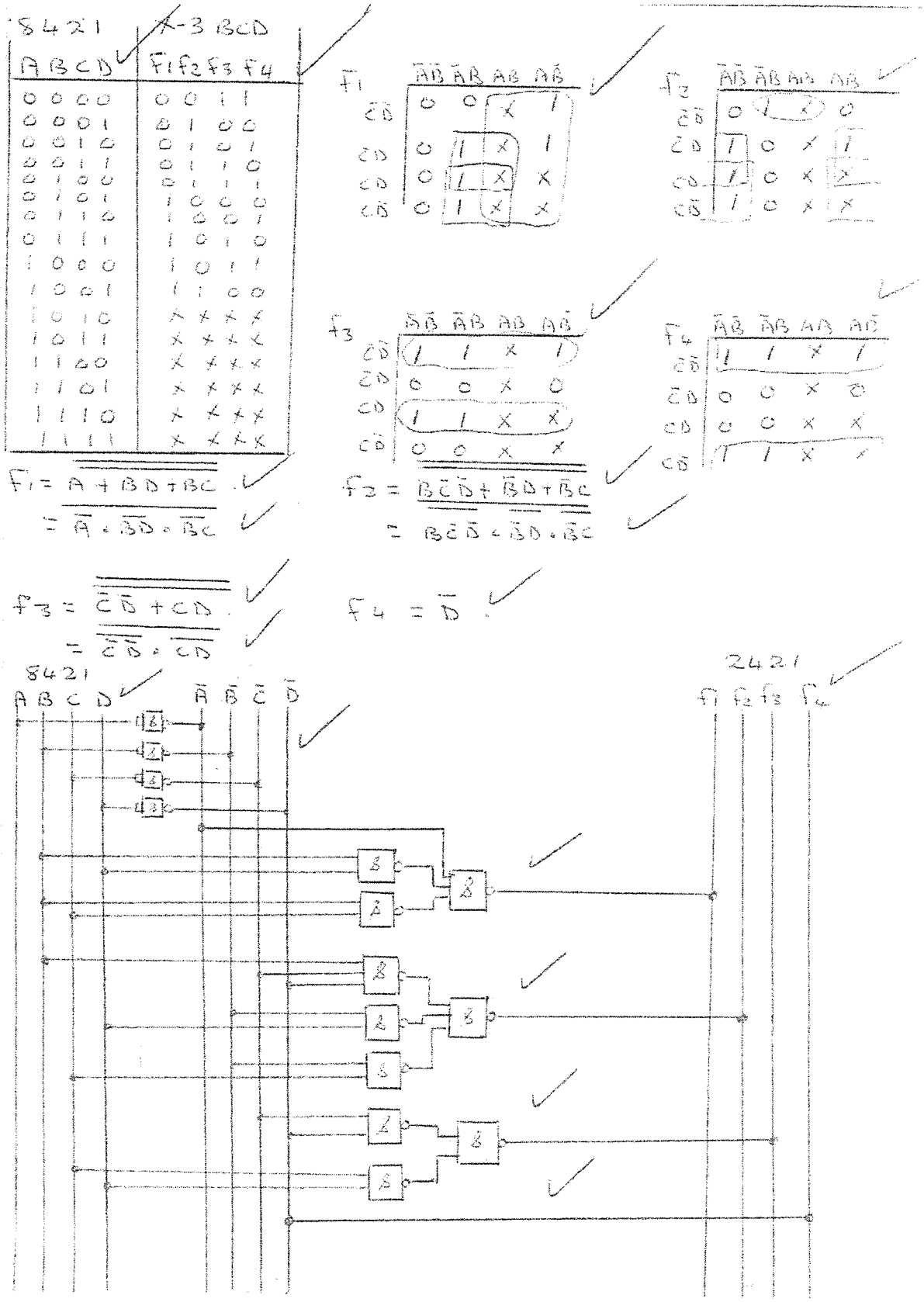

[20]

Copyright reserved

QUESTION 5

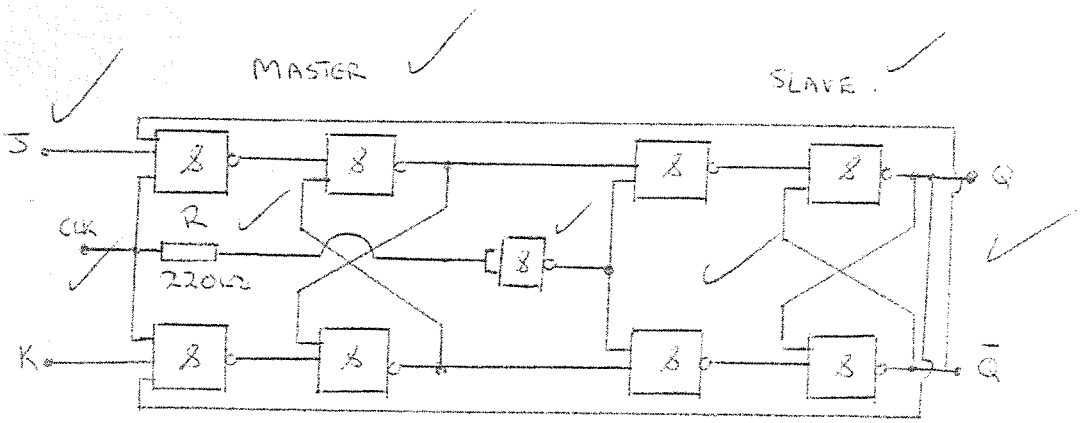

[8]

TOTAL: 100

Copyright reserved