higher education & training

Department:
Higher Education and Training
REPUBLIC OF SOUTH AFRICA

MARKING GUIDELINE

NATIONAL CERTIFICATE

LOGIC SYSTEMS N4

12 AUGUST 2021

This marking guideline consists of 9 pages.

Copyright reserved

✓ = 1 MARK; √ = $\frac{1}{2}$ MARK

QUESTION 1

1.1 0 , 1, 2 , 3 , 4 , 5 , 6 , 7 , 8 , 9 , A , B , C , D ,E , F (1)

1.2 $F = \overline{A+B}$ ✓

A	B	F
0	0	1
0	1	0
1	0	0
1	1	0

✓

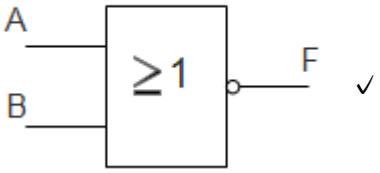

✓

(3)

1.3 01011000_2 (1)

1.4 1.4.1 False
1.4.2 False
1.4.3 False
1.4.4 True
1.4.5 True

(5 × 1) (5)

1.5 1.5.1 1
1.5.2 $\overline{A} + B$
1.5.3 1
1.5.4 $\overline{A}$

(4 × 1) (4)

1.6 1.6.1

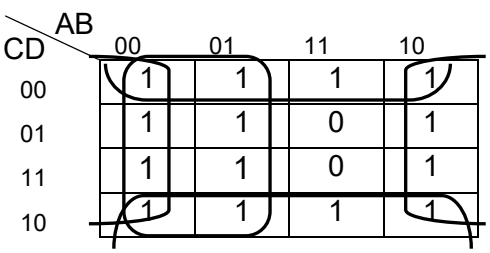

✓

$F = \overline{A}+\overline{B}+\overline{D}$✓

1.6.2

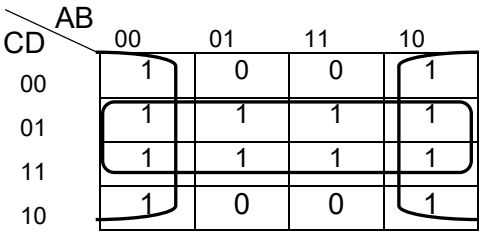

✓

$F = \overline{B} + D$ ✓

1.6.3

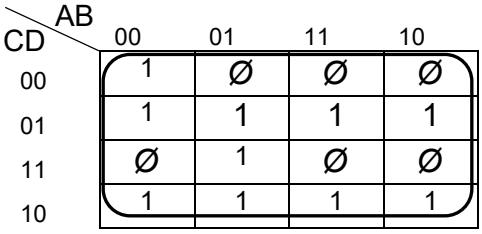

✓

$F = 1$ ✓

(3 × 2) (6)
[20]

QUESTION 2

2.1 2.1.1 $13,35_{10} - 7,2_8$

$13,35_{10} = 1101,0101_2$ ✓½

$7,2_8 = 111,010_2$ ✓½

$$\begin{array}{r} 1101,0101 \\ -0111,0100 \\ \hline 1000,1011 \end{array}$$ ✓

$$\begin{array}{r} +\boxed{1}1101,0101 \\ \hline 1000,1011 \\ +\qquad\quad 1 \\ \hline 0110,0001 \end{array}$$ ✓ ✓

$110,001100_2 = 6,14_8$ ✓

(6)

2.1.2 $183,65_{10} \times B,C_{16}$

$183,65_{10} = 10110111,1010_2$ ✓½

$3,4_8 = 1011,1100_2$ ✓½

$$\begin{array}{r} 10110111,1010 \\ \times \quad 11011,1100 \\ \hline 10110111101000 \checkmark \\ 101101111010000 \\ 1011011110100000 \checkmark \\ 10110111101000000 \\ + \quad 1011011110100000000 \checkmark \\ \hline 1000011011 01,10011000 \checkmark \end{array}$$

$1001011000011011 01,10011000 = 86D,98_{16}$ ✓ (6)

2.1.3 $651,3_8 \div 6,75_{10}$

$651,3_8 = 110101001,011_2$ ✓½

$6,75_{10} = 110,11_2$ ✓½

$$\begin{array}{r} 110000,1 \checkmark \\ 11011 \overline{)\,11010100101,1} \\ \underline{-11011} \checkmark \\ 11100 \\ \underline{-11011} \checkmark \\ 00101011 \\ \underline{-11011} \\ 10000 \checkmark \end{array}$$

$110000,1_2 = 48,5_{10}$ ✓ (6)

2.2 American Standard Code for Information Interchange✓ ✓ (2)

2.3 T – 101 0100
u – 111 0101
K – 100 1011
S – 111 0011
! – 010 0001 (5)

[25]

QUESTION 3

3.1 3.1.1

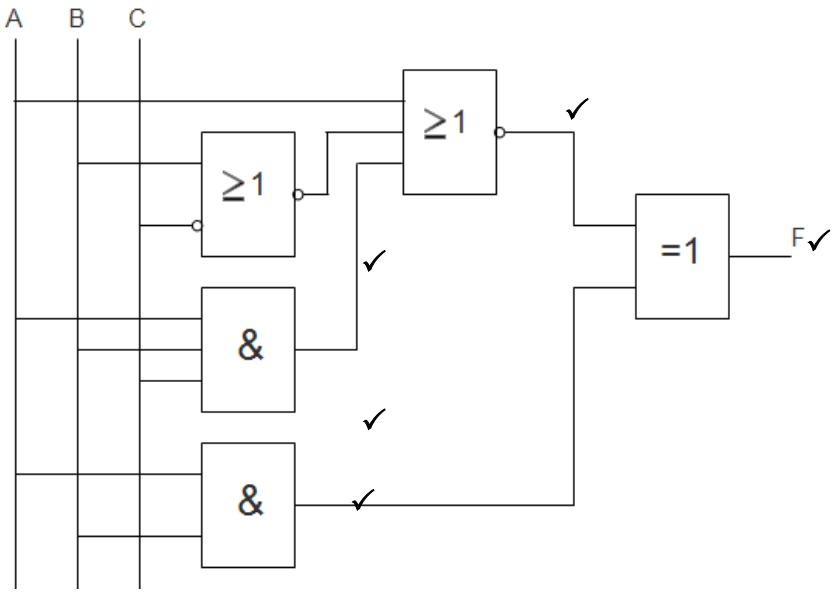

(5)

3.1.2

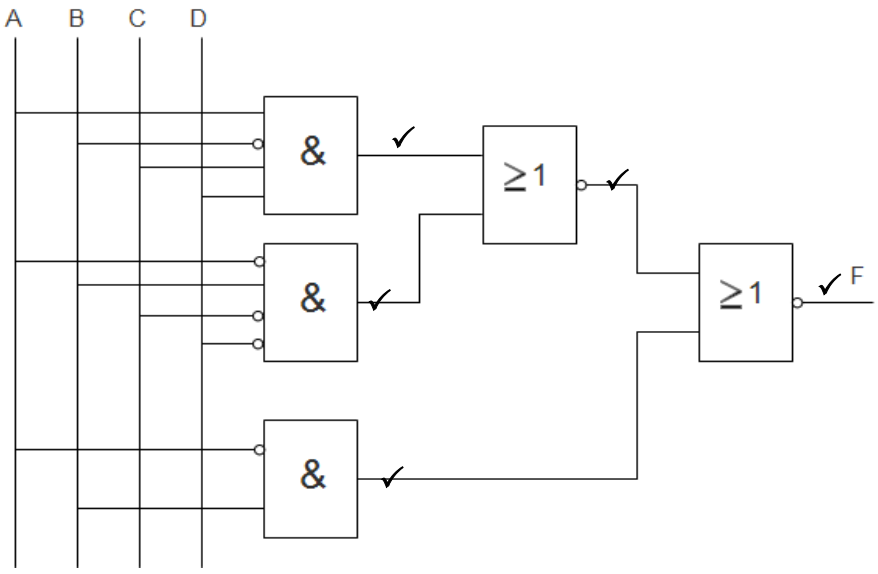

(5)

3.1.3

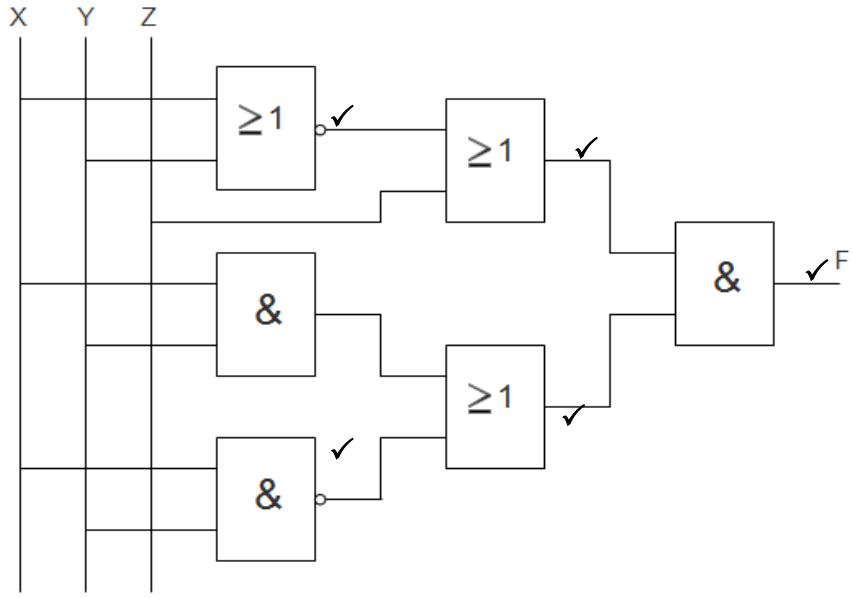

(5)

3.2 3.2.1

A	B	C	F
0	0	0	0
0	0	1	0
0	1	0	0
0	1	1	1 ✓
1	0	0	0
1	0	1	1
1	1	0	1 ✓
1	1	1	1

(2)

3.2.2

$$F = \overline{A}BC + A\overline{B}C + AB\overline{C} + ABC$$
$$= \overline{A}BC + A\overline{B}C + AB(C + \overline{C}) \quad ✓$$
$$= \overline{A}BC + A\overline{B}C + AB \quad ✓$$
$$= \overline{A}BC + A(B + \overline{B}C)$$
$$= \overline{A}BC + BB + AC \quad ✓$$
$$= B(\overline{A}C + A) + AC$$
$$= AB + BC + AC \quad ✓$$
$$= \overline{\overline{AB + BC + AC}}$$
$$= \overline{\overline{AB} \cdot \overline{BC} \cdot \overline{AC}} \quad ✓$$

(5)

3.2.3

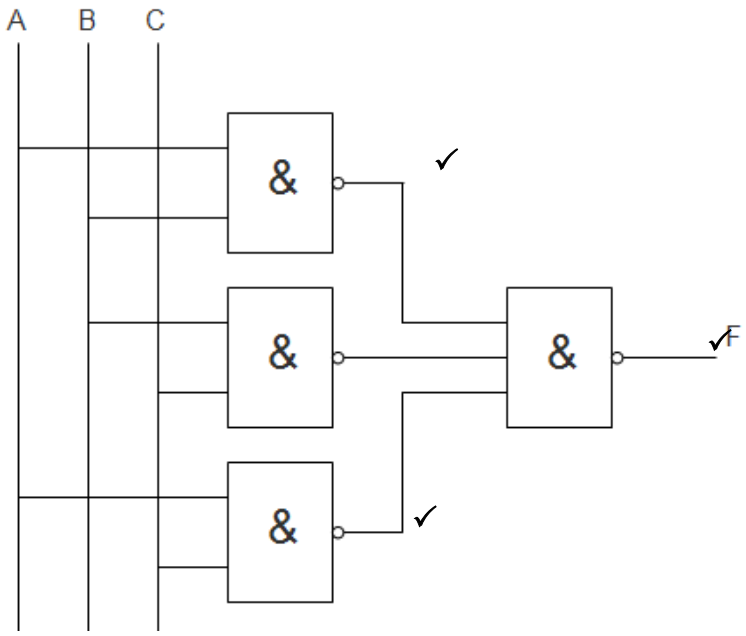

(3)
[25]

QUESTION 4

INPUTS (8421 BCD)				OUTPUTS (GRAY)			
A	B	C	D	W	X	Y	Z
0	0	0	0	0	0	0	0
0	0	0	1	0	0	0	1
0	0	1	0	0	0	1	1
0	0	1	1	0	0	1	0
0	1	0	0	0	1	1	0
0	1	0	1	0	1	1	1
0	1	1	0	0	1	0	1
0	1	1	1	0	1	0	0
1	0	0	0	1	1	0	0
1	0	0	1	1	1	0	1
1	0	1	0	1	1	1	1
1	0	1	1	1	1	1	0
1	1	0	0	1	0	1	0
1	1	0	1	1	0	1	1
1	1	1	0	1	0	0	1
1	1	1	1	1	0	0	0
				✓	✓	✓	✓

Learner must show Karnaugh map and correct simplification for 1 mark.
Award ½ mark if Karnaugh map is correct but simplification is incorrect.

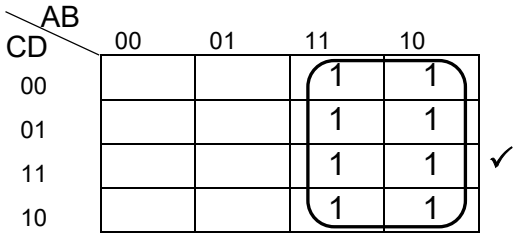

✓

W = A ✓

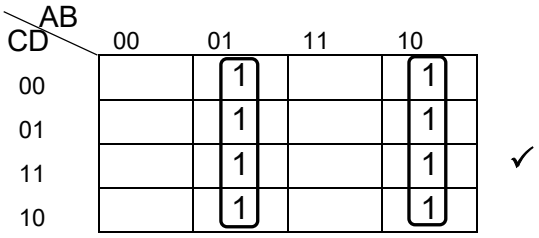

✓

$X = \bar{A}B + A\bar{B}$ ✓ $= A \oplus B$ ✓

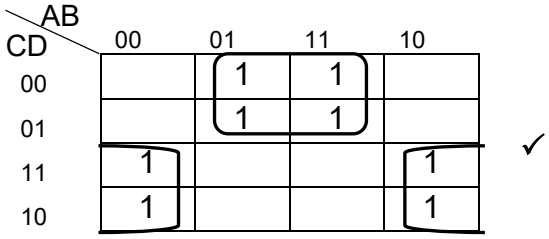

✓

$Y = B\bar{C} + \bar{B}C$ ✓

$= B \oplus C$ ✓

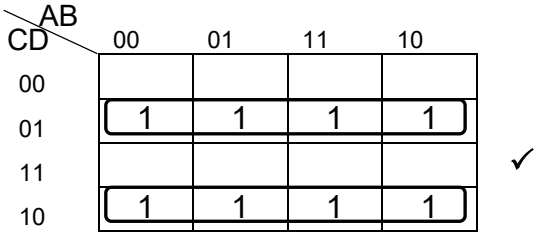

✓

$Z = \bar{C}D + C\bar{D}$ ✓

$= C \oplus D$ ✓

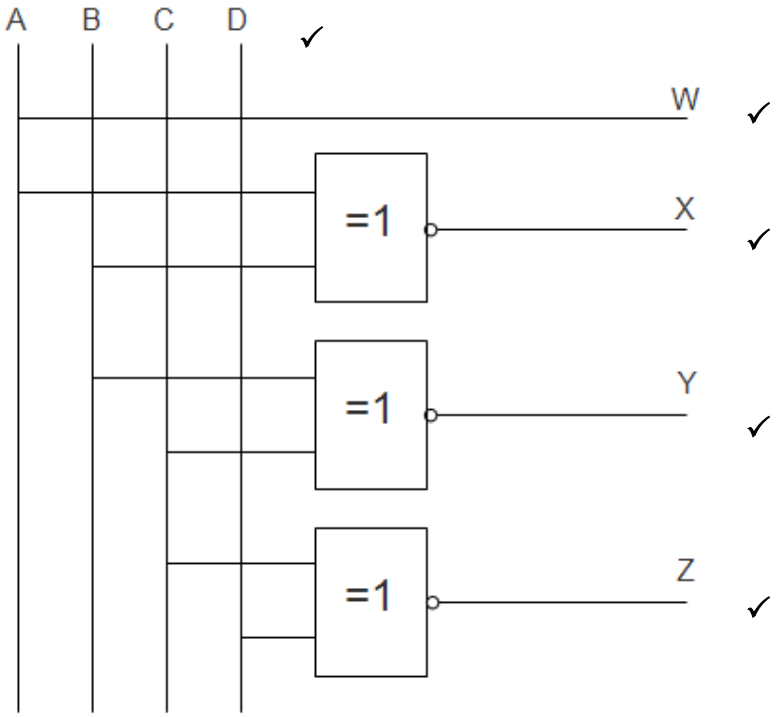

✓ ✓ ✓ ✓ ✓

[20]

QUESTION 5

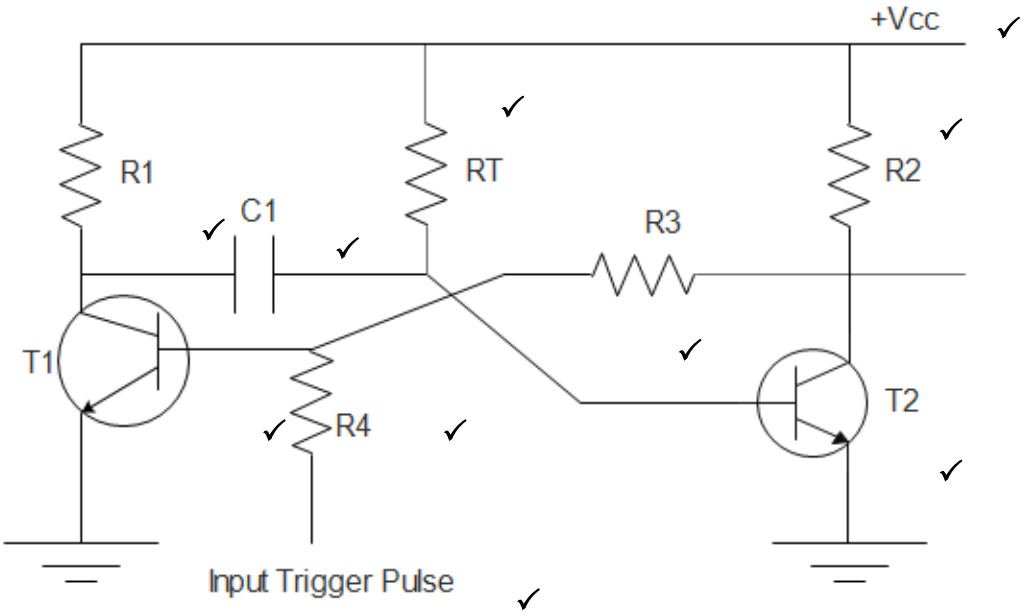

Accept other variations of the circuit. **[10]**

TOTAL: 100

Copyright reserved