higher education & training

Department:
Higher Education and Training
REPUBLIC OF SOUTH AFRICA

MARKING GUIDELINE

NATIONAL CERTIFICATE

LOGIC SYSTEMS N4

16 April 2020

This marking guideline consists of 9 pages.

Copyright reserved

✓ = 1 mark: √ = ½ mark

QUESTION 1

1.1 0; 1; 2; 3; 4; 5; 6; 7 (1)

1.2 0,25 (1)

1.3 F (1)

1.4 10110101_2

01001010 ✓

$+\ 1$

01001011_2 ✓ (2)

1.5 Asynchronous (1)

1.6 Two (1)

1.7 A full adder has carry input and a half adder has no carry input. (1)

1.8 Fixed -function ICs (integrated circuits) that have up to ten equivalent gate circuits (basic gates and flip-flops) on a single chip (2)

1.9 1.9.1 $(A+\overline{A})+B\overline{B}=1$ ✓

1.9.2 $A\overline{C}+1+A=1$ ✓

1.9.3 $BCD+B+B\overline{C}\overline{D}=B(CD+1+\overline{C}\overline{D})=B$ ✓

1.9.4 $AB+AB\overline{A}=AB$ ✓

(4 × 1) (4)

1.10 1.10.1

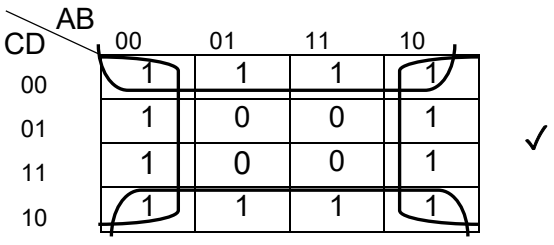

✓

$F=\overline{B}+\overline{D}$ ✓

1.10.2

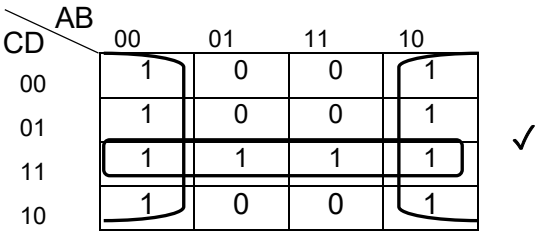

✓

$F = \overline{B} + CD$ ✓

1.10.3

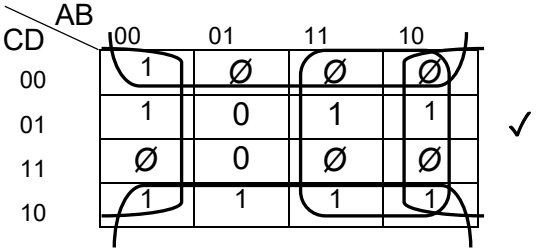

✓

$F = A + \overline{B} + \overline{D}$ ✓

(3 × 2) (6)
[20]

QUESTION 2

2.1 2.1.1 $B7,A_{16} - 73,6_8$

$B7,A_{16} = 10110111,1010_2$ ✓½

$73,6_8 = 111011,110_2$ ✓½

$$\begin{array}{r} 10110111,101 \checkmark \\ -\ 00111011,110 \\ \hline \end{array}$$

$$\begin{array}{r} 11000100,001 \\ +\ \qquad\qquad 1 \checkmark \\ \hline 11000100,010 \checkmark \end{array}$$

$$\begin{array}{r} 1c + 10110111,101 \\ \hline 01111011,111 \checkmark \end{array}$$

$001111011,111_2 = 173,7_8$ ✓ (6)

2.1.2 $213,45_{10} \times A,B_{16}$

$213,45_{10} = 11010101,0111_2$ ✓½

$A,B_{16} = 1010,1011_2$ ✓½

$$\begin{array}{r} 11010101,0111 \\ \times \quad 1010,1011 \\ \hline 110101010111 \\ 1101010101110 \checkmark \\ 110101010111000 \\ 11010101011100000 \checkmark \\ + \quad 1101010101110000000 \checkmark \\ \hline 1000111010001,00011101 \checkmark \end{array}$$

$1000111010001,00011101 = 4351,072_8$ ✓ (6)

2.1.3 $745,1_8 \div 4,25_{10}$

$745,1_8 = 111100101,001_2$ ✓½

$4,25_{10} = 100,01_2$ ✓½

$$\begin{array}{r} 1110010,001 \checkmark \\ 10001 \overline{)\,11110010100,100} \\ -10001 \ \checkmark \\ 11010 \\ -10001 \ \checkmark \\ 10011 \\ -10001 \\ 10010 \\ -10001 \\ 10100 \\ -10001 \\ 11 \ \checkmark \end{array}$$

$1110010,001_2 = 114,125_{10}$ ✓ (6)

2.2 American Standard Code for Information Interchange (2)

2.3 **S - 101 0011**✓
P - 101 0000✓
a - 110 0001✓
R - 101 0010✓
? - 011 1111✓ (5)

[25]

QUESTION 3

3.1 3.1.1

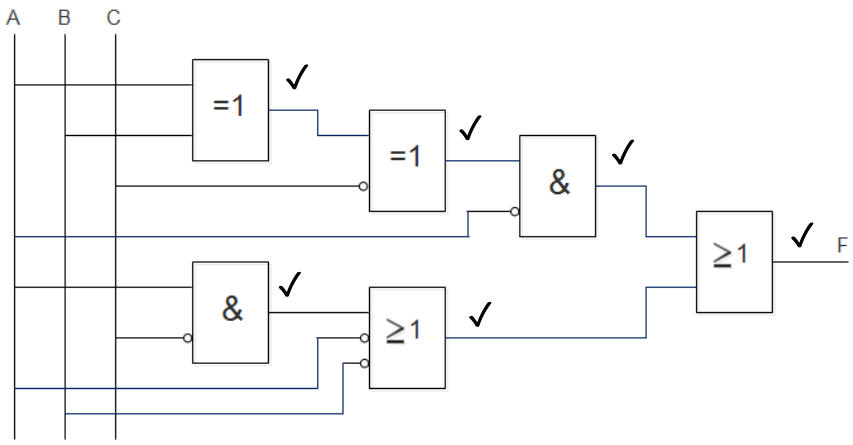

(6)

3.1.2

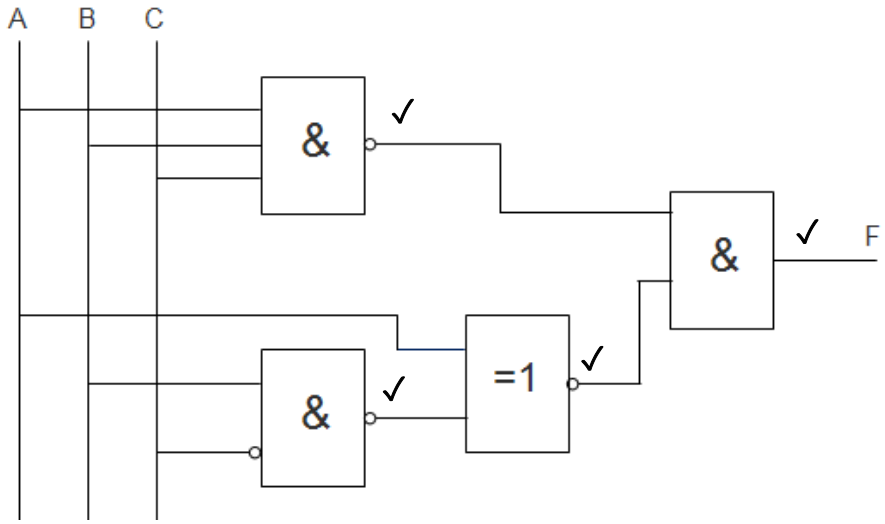

(4)

3.1.3

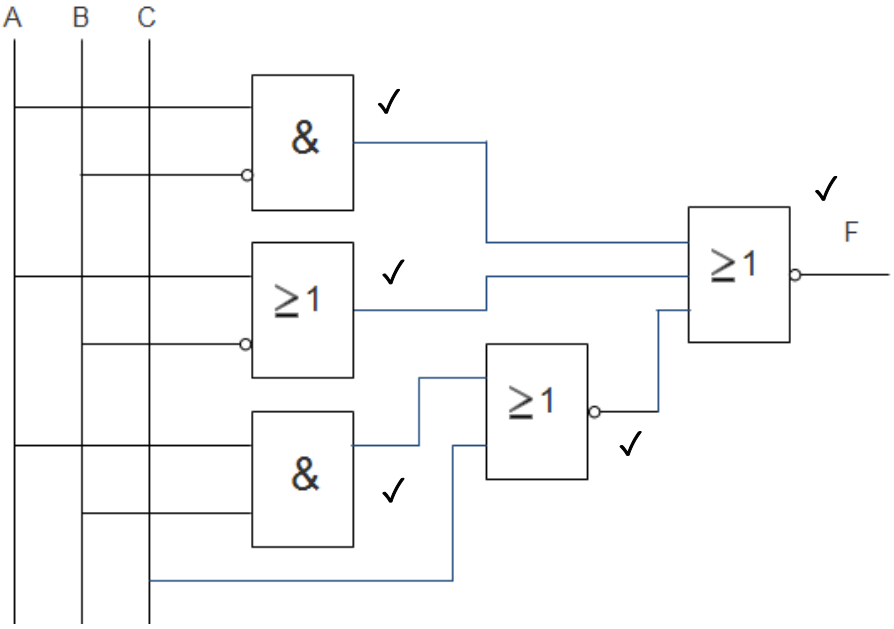

(5)

3.2 3.2.1

$$F = A(\bar{A}+\bar{B}+C)(A+\bar{B}+C)(\bar{A}+B+\bar{C})$$
$$= (A\bar{A}+AC)(A+\bar{B}+C)(\bar{A}+B+\bar{C}) \checkmark^{½}$$
$$= (A\bar{B}+A\bar{B}+A\bar{B}C+AC+A\bar{B}C+AC)(\bar{A}+B+\bar{C}) \checkmark^{½}$$
$$= (A\bar{B}+A\bar{B}C+AC)(\bar{A}+B+\bar{C}) \checkmark^{½}$$
$$= (A\bar{B}+AC)(\bar{A}+B+\bar{C}) \checkmark^{½}$$
$$= A\bar{B}\bar{C}+ABC \checkmark^{½}$$

$$F = \overline{\overline{A\bar{B}\bar{C}+ABC}}$$
$$= \overline{\overline{A\bar{B}\bar{C}}.\ \overline{ABC}} \checkmark^{½}$$

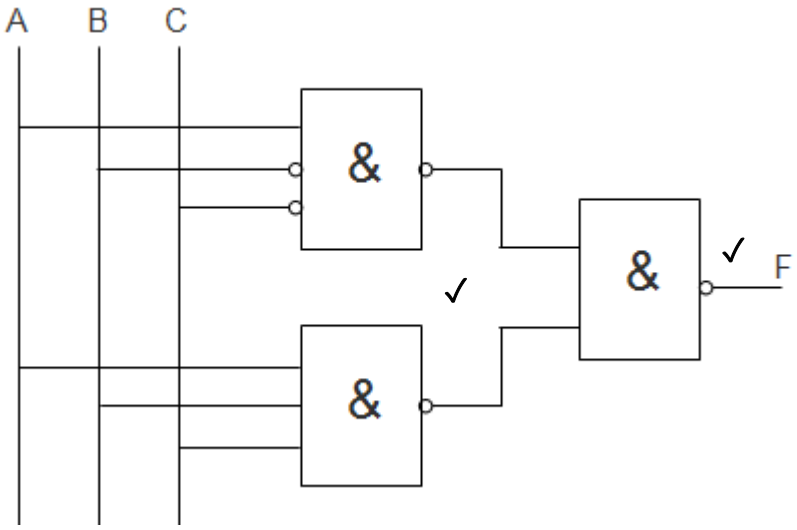

(5)

3.2.2 $F = \overline{\overline{AB + A\bar{B}C} + B\bar{C}}$

$= \overline{\overline{AB + A\bar{B}C} \cdot \overline{B\bar{C}}}$ ✓½

$= (AB + A\bar{B}C)(\bar{B} + C)$

$= AB\bar{B} + ABC + A\bar{B}\bar{B}C + A\bar{B}CC$ ✓½

$= ABC + A\bar{B}C + A\bar{B}C$ ✓½

$= ABC + A\bar{B}C$ ✓½

$= AC(B + \bar{B})$

$= AC$ ✓½

$F = \overline{\overline{AC}}$ ✓½

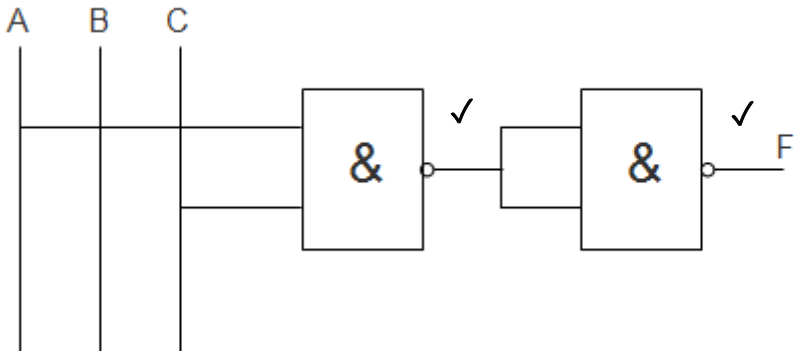

(5)
[25]

QUESTION 4

Input				Output							
A	B	C	D	J_A	K_A	J_B	K_B	J_C	K_C	J_D	K_D
0	0	0	0	0	Ø	0	Ø	Ø	1	1	Ø
0	0	1	1	0	Ø	1	Ø	Ø	1	Ø	0
0	1	0	1	0	Ø	Ø	0	1	Ø	Ø	0
0	1	1	1	1	Ø	Ø	1	Ø	1	Ø	1
1	0	0	0	Ø	0	0	Ø	1	Ø	0	Ø
1	0	1	0	Ø	0	1	Ø	Ø	1	0	Ø
1	1	0	0	Ø	0	Ø	0	0	Ø	1	Ø
1	1	0	1	Ø	0	Ø	0	1	Ø	Ø	1
1	1	1	0	Ø	0	Ø	0	Ø	0	1	Ø
1	1	1	1	Ø	1	Ø	1	Ø	1	Ø	1
				✓½		✓½		✓½		✓½	

$Ø = (0001; 0010; 0100; 0110; 1001; 1011)$

Learner must show Karnaugh map and correct simplification for 1 mark.
Award ½ mark if Karnaugh map is correct but simplification is incorrect.

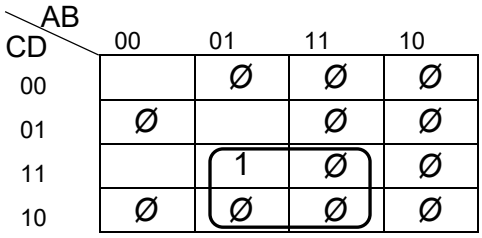

$J_A = BC$ ✓

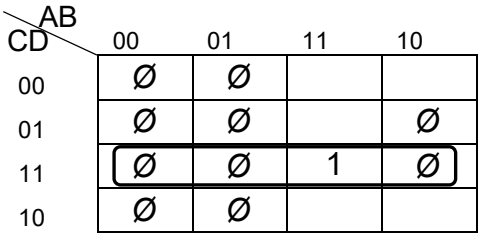

$K_A = CD$ ✓

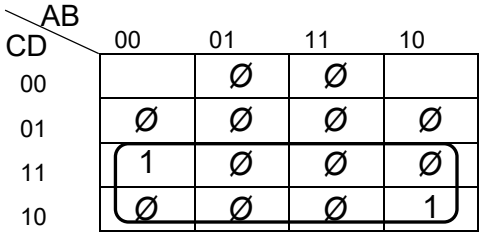

$J_B = C$ ✓

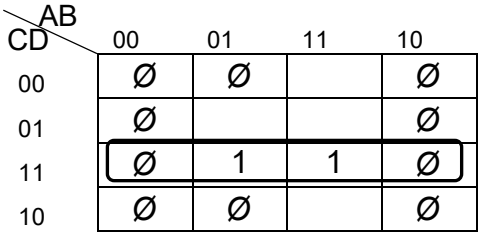

$K_B = CD$ ✓

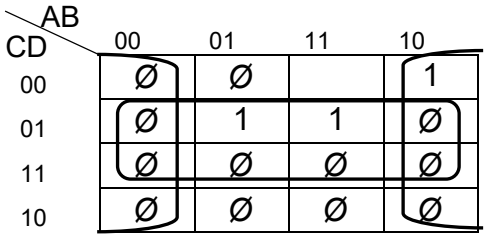

$J_C = \overline{B} + D$ ✓

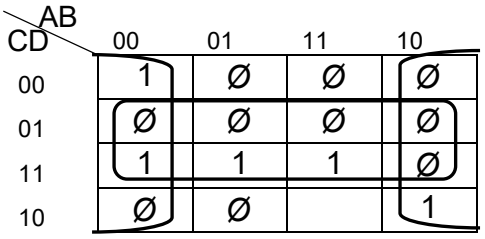

$K_C = \overline{B} + \overline{D}$ ✓

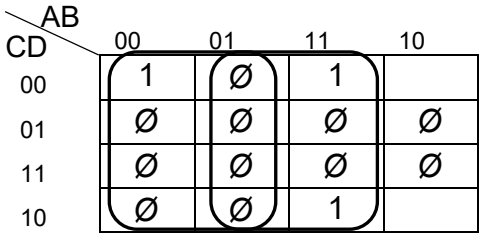

$J_D = \overline{A} + B$ ✓

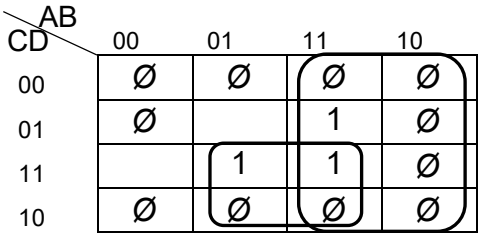

$K_D = A + BC$ ✓

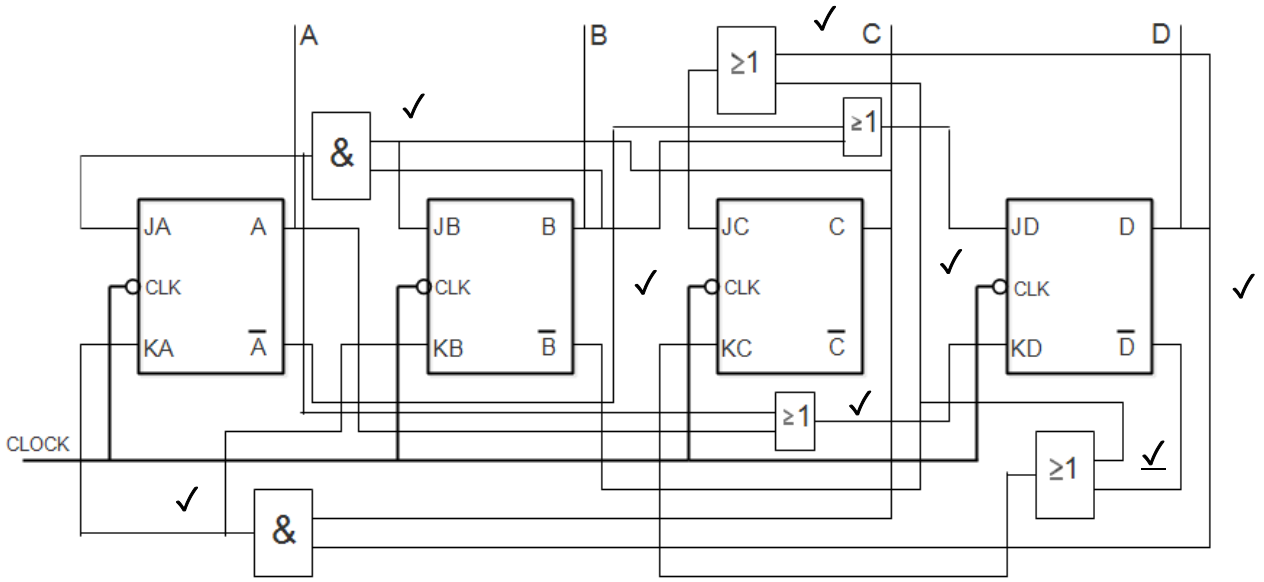

[20]

QUESTION 5

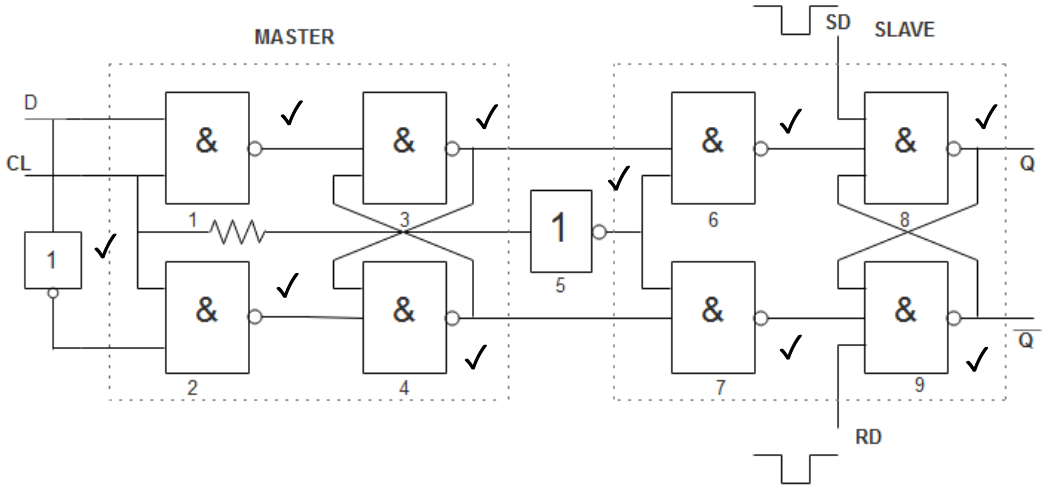

[10]

TOTAL: 100

Copyright reserved