higher education & training

Department:
Higher Education and Training
REPUBLIC OF SOUTH AFRICA

MARKING GUIDELINE

NATIONAL CERTIFICATE

LOGIC SYSTEMS N4

9 APRIL 2018

This marking guideline consists of 7 pages.

Copyright reserved

QUESTION 1

1.1
1.1.1 False
1.1.2 False
1.1.3 False
1.1.4 True
1.1.5 True

(5 × 1) (5)

1.2
1.2.1 Boolean complement is the opposite of a variable✓ in that the complement is indicated by an over-bar over the variable.✓

1.2.2 Loading/Fan out is the maximum number of standard inputs that can reliably be driven by one outfit.

1.2.3 Noise immunity is the amount of noise on the input of a logic gate without affecting the outputs logic state.

1.2.4 Boolean variable is a symbol used to represent an action, condition or data✓ and the variable can only have a value of 1 or 0.✓

(4 × 2) (8)

1.3

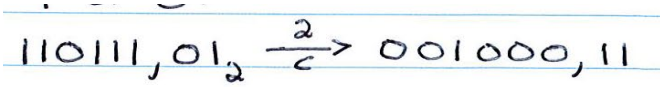

(1)

1.4

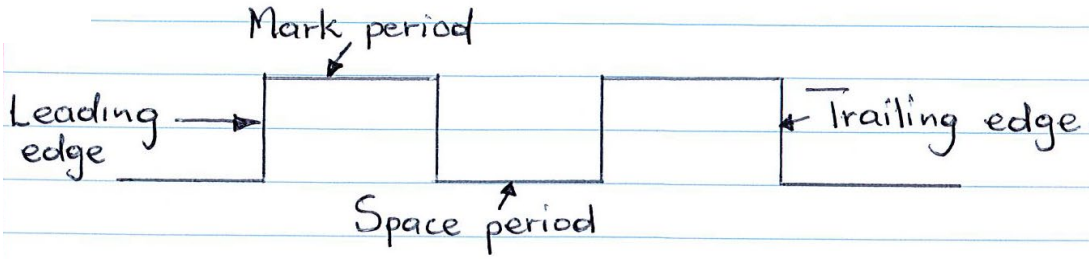

(4)

1.5
- Binary number system
- Base = 2

(2)
[20]

QUESTION 2

2.1 2.1.1

$9,25_{10} = 1001,01_2$ ✓ $6,5_8 = 110,101_2$ ✓

0110,101 0110,101
−1001,010 $\frac{1}{c}$ 0110,101 ✓
$\square$ 1101,010
No carry, compliment answer ✓

$1101,010 - 0010,101_2 = 1\times2^1 + 0\times2^0 + 1\times2^{-1} + 1\times2^{-3}$
$= 2,625_{10}$ ✓✓

2.1.2

$13,5_8 = 1011,101_2$ ✓ $5,25_{10} = 101,01_2$ ✓

0110,101 0110,101
−1001,010 $\frac{1}{c}$ 0110,101 ✓
$\square$ 1101,010
No carry, compliment answer ✓

$1101,010 - 0010,101_2 = 1\times2^1 + 0\times2^0 + 1\times2^{-1} + 1\times2^{-3}$
$= 2,625_{10}$ ✓✓

2.1.3

$14,75_{10} = 1110,11_2$ ✓ $6,4_8 = 110,1_2$ ✓

$10,010_2$ ✓
1101 | 11101,100
−1101
1110 ✓
−1101
10

$10,010_2 = 010,010$ ✓
421 421
$= 2,2_8$ ✓

(3 × 6) (18)

2.2 2.2.1

5 , 3 5
8421 8421 8421
0101 , 0011 0101 8421BCD

2.2.2

5 , 3 5
2421 2421 2421
1011 , 0011 1011 2421BCD

(2 × 3) (6)

2.3

\# = 0100011
L = 1001100
O = 1001111
G = 1000111
I = 1001001
C = 1000011

(6)
[30]

QUESTION 3

3.1

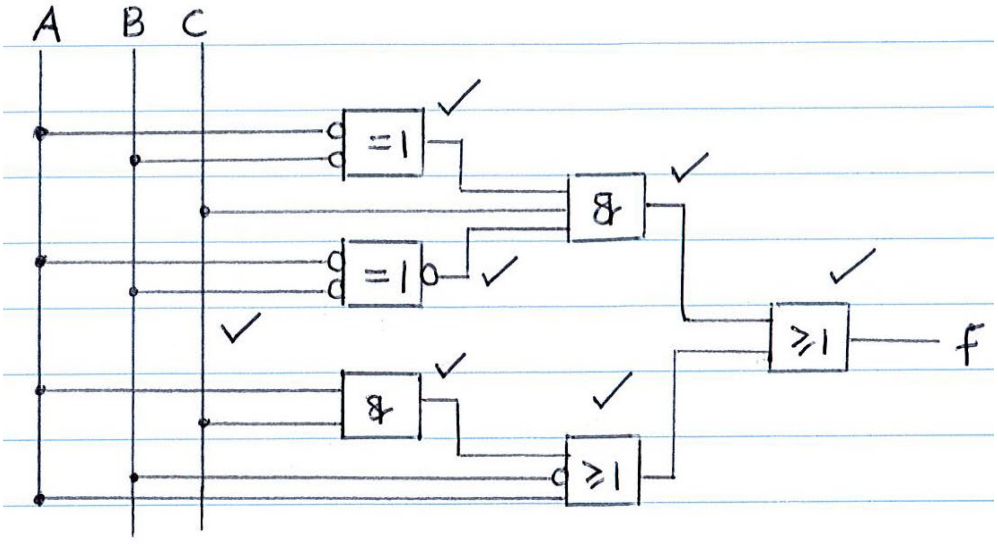

(7)

3.2 3.2.1

A	B	A⊕B	
0	0	0	✓
0	1	1	
1	0	1	
1	1	0	

(1)

3.2.2

$\bar{A}B + A\bar{B} + A\bar{A} + B\bar{B}$ ✓

$\bar{A}B + A\bar{A} + A\bar{B} + B\bar{B}$ ✓

$\bar{A}(A+B) + \bar{B}(A+B)$ ✓

$(\bar{A}+\bar{B})(A+B)$ ✓

$(\overline{AB})(A+B)$ ✓

$A\overline{AB} + B\overline{AB}$ ✓

(6)

3.2.3

$$\overline{A\overline{AB} + B\overline{AB}}$$

$$\overline{A\overline{AB}} \cdot \overline{B\overline{AB}}$$

(2)

3.2.4

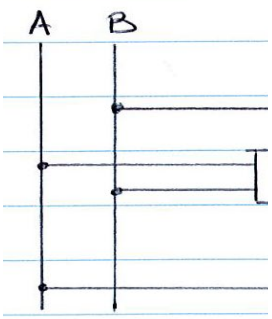

(4)
[20]

QUESTION 4

INPUT ✓ OUTPUT ✓

8	4	2	1	8	4	2	1
A	B	C	D	f_1	f_2	f_3	f_4
0	0	0	0	0	0	0	0
0	0	0	1	0	0	0	1
0	0	1	0	0	0	1	0
0	0	1	1	0	0	1	1
0	1	0	0	0	1	0	0
0	1	0	1	1	0	1	1
0	1	1	0	1	1	0	0
0	1	1	1	1	1	0	1
1	0	0	0	1	1	0	0
1	0	0	1	1	1	1	1
1	0	1	0	X	X	X	X
1	0	1	1	X	X	X	X
1	1	0	0	X	X	X	X
1	1	0	1	X	X	X	X
1	1	1	0	X	X	X	X
1	1	1	1	X	X	X	X

f_1

	$\bar{A}\bar{B}$	$\bar{A}B$	AB	$A\bar{B}$
$\bar{C}\bar{D}$	0	0	X	1
$\bar{C}D$	0	1	X	1
CD	0	1	X	X
$C\bar{D}$	0	1	X	X

$f_1 = A + BD + B\bar{C}$ ✓
$= \overline{A + BD + B\bar{C}}$
$= \overline{\bar{A} \cdot \overline{BD} \cdot \overline{B\bar{C}}}$ ✓

f_2

	$\bar{A}\bar{B}$	$\bar{A}B$	AB	$A\bar{B}$
$\bar{C}\bar{D}$	0	1	X	1
$\bar{C}D$	0	0	X	1
CD	0	1	X	X
$C\bar{D}$	0	1	X	X

$f_2 = A + B\bar{D} + B\bar{C}$ ✓
$= \overline{A + B\bar{D} + B\bar{C}}$
$= \overline{\bar{A} \cdot \overline{B\bar{D}} \cdot \overline{B\bar{C}}}$ ✓

f_3

	$\bar{A}\bar{B}$	$\bar{A}B$	AB	$A\bar{B}$
$\bar{C}\bar{D}$	0	0	X	1
$\bar{C}D$	0	1	X	1
CD	1	0	X	X
$C\bar{D}$	1	0	X	X

$f_3 = A + \bar{B}C + B\bar{C}D$ ✓
$= \overline{A + \bar{B}C + B\bar{C}D}$
$= \overline{\bar{A} \cdot \overline{\bar{B}C} \cdot \overline{B\bar{C}D}}$ ✓

f_4

	$\bar{A}\bar{B}$	$\bar{A}B$	AB	$A\bar{B}$
$\bar{C}\bar{D}$	0	0	X	0
$\bar{C}D$	1	1	X	1
CD	1	1	X	X
$C\bar{D}$	0	0	X	X

$f_4 = D$ ✓

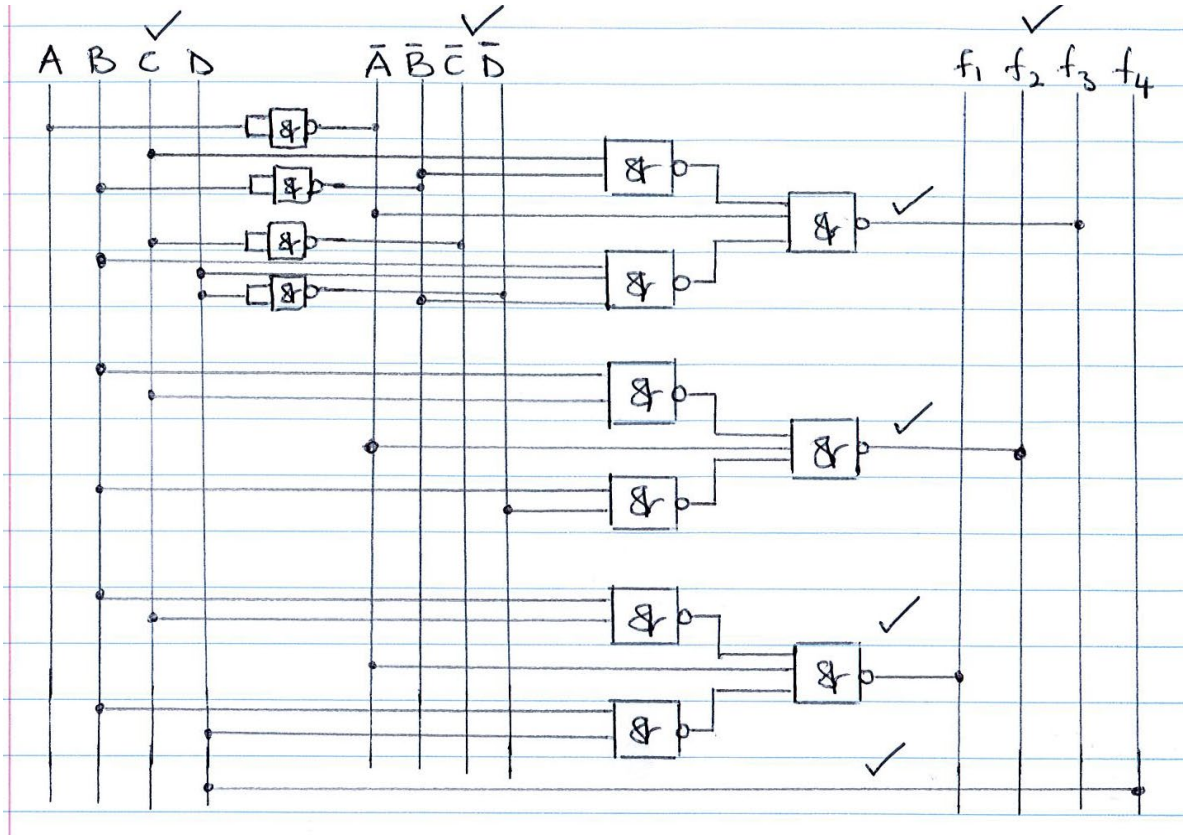

[20]

QUESTION 5

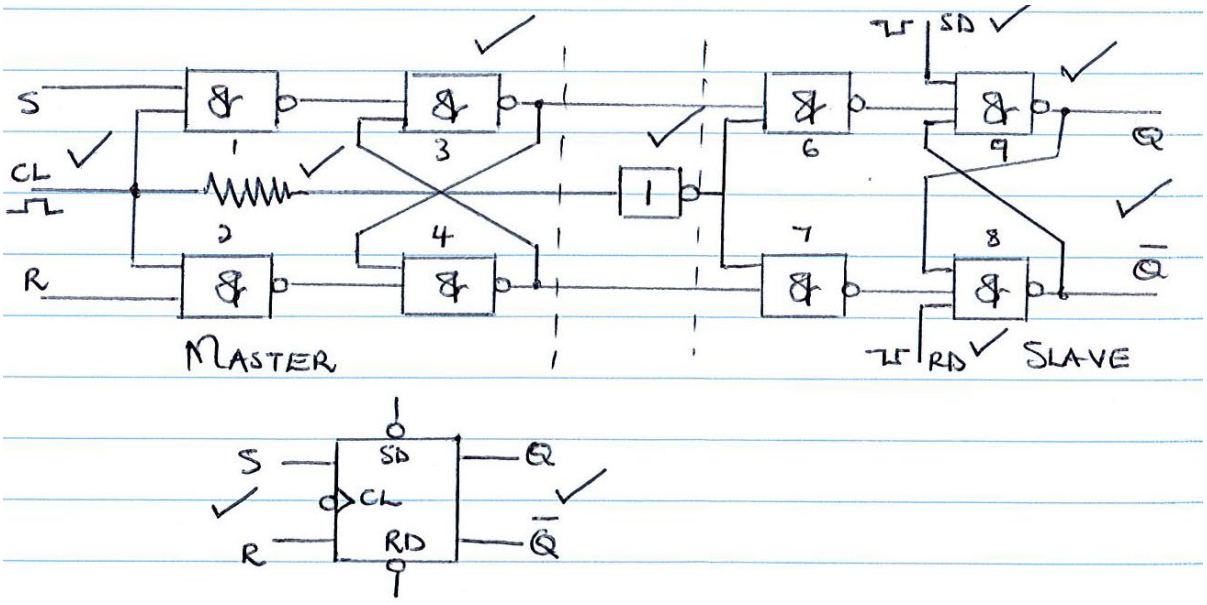

[10]

TOTAL: 100

Copyright reserved