higher education & training

Department:
Higher Education and Training
REPUBLIC OF SOUTH AFRICA

MARKING GUIDELINE

NATIONAL CERTIFICATE

APRIL EXAMINATION

LOGIC SYSTEMS N4
(First Paper)

8 APRIL 2016

This marking guideline consists of 8 pages.

Copyright reserved

QUESTION 1

1.1 Large storage of data (1)

1.2
- RAM
- ROM (2)

1.3 $\overline{A} + \overline{B} = \overline{AB}$
$\overline{A.B} = \overline{A+B}$ (2)

1.4

A	B	Q
0	0	1
0	1	0
1	0	0
1	1	0

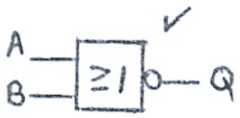

$Q = \overline{A+B}$ (3)

1.5
- Groups must be as large as possible.
- Group the 1's together.
- Groups may overlap.
- Group horizontal/vertical items.
- Use as few groups as possible. (5)

1.6 1.6.1 A
1.6.2 1
(2 x 1) (2)

1.7

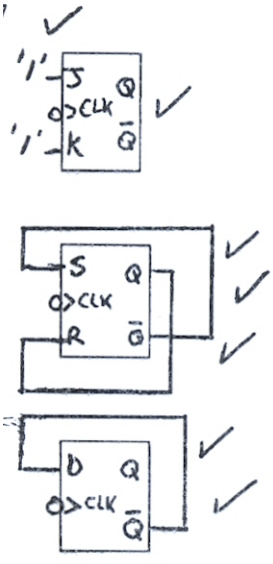

(7)
[22]

QUESTION 2

2.1 2.1.1

$7{,}5_8 = 111{,}101_2$

$9{,}125_{10} = 1001{,}001_2$ TWO'S /TWEE SE COMPLIMENT

$$\begin{array}{r} 0111{,}101_2 \\ \underline{0110{,}111_2} \\ 1110{,}100_2 \end{array}$$

NO CARRY GET 2'S COMPLIMENT / GEEN OORDRAG KRY 2'SE KOMPL. $\mathbf{-0001{,}100_2 = -1{,}4_8}$

(6)

2.1.2

$11{,}375_{10} = 1011{,}011_2$

$5{,}2_8 = 101{,}01_2$

$$\begin{array}{r} 1011{,}011 \\ \underline{\times\ 101{,}01} \\ 1011011 \\ 101101100 \\ \underline{1011011\,0000} \\ \mathbf{111011{,}10111_2} = \mathbf{73{,}56_8} \end{array}$$

(6)

2.1.3

$14{,}125_{10} = 1110{,}001_2$

$6{,}4_8 = 110{,}100_2$

$$\begin{array}{r} \mathbf{10{,}001_2} = \mathbf{2{,}125_{10}} \\ 110100\overline{)\,1110001{,}000} \\ \underline{1101000}\phantom{{,}000} \\ 0001001000 \\ \underline{0000110100} \\ 0000010100 \end{array}$$

(6)

2.2

$5_{10} = 0101_2$

P1	P2	D1	P3	D2	D3	D4
1	2	3	4	5	6	7
0	1	0	0	1	0	1

P1 = 1, 3, 5, 7 (0 0 1 1)

P2 = 2, 3, 6, 7 (1 0 0 1)

P3 = 4, 5, 6, 7 (0 1 0 1)

TX Data = 0100101_{Hamming}

(6)

[24]

QUESTION 3

3.1 3.1.1 (5)

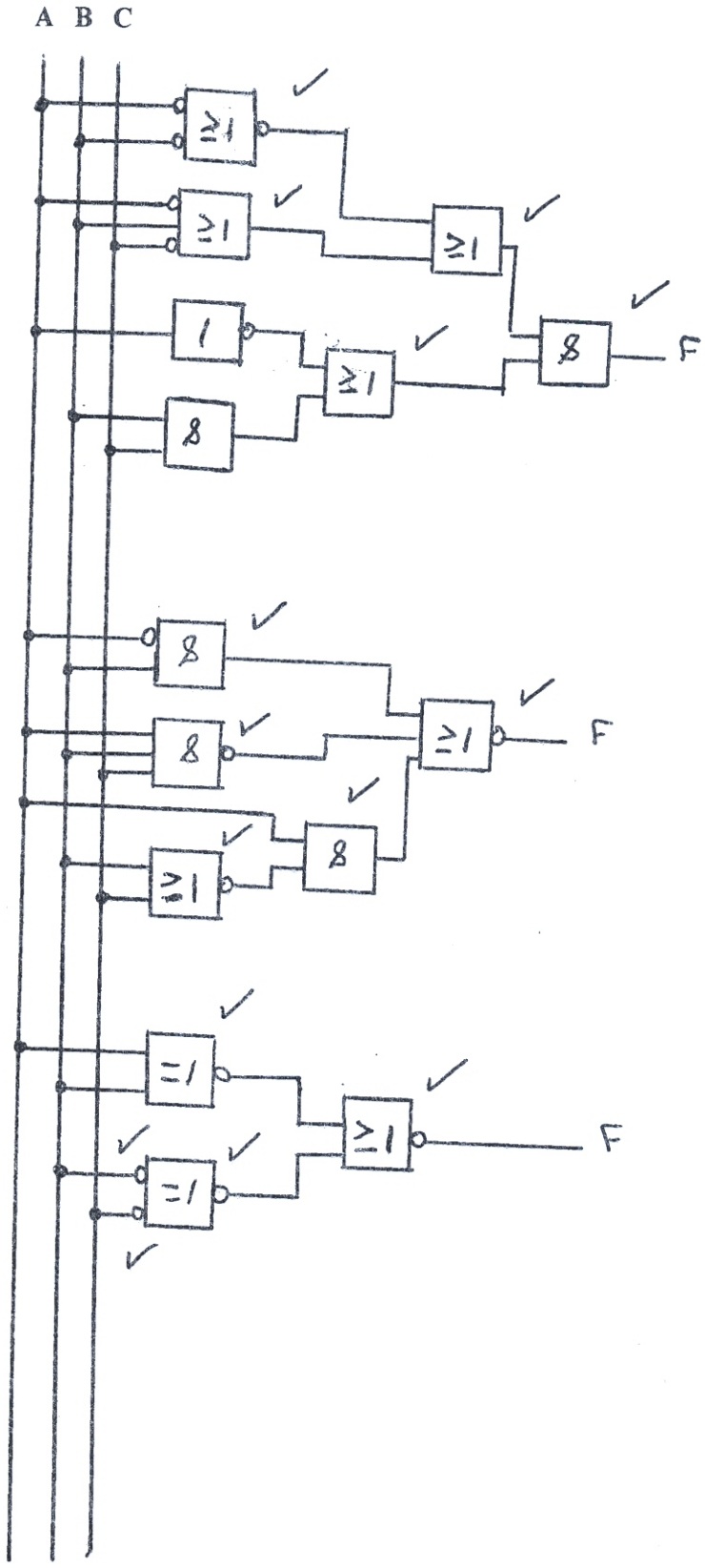

3.1.2 (5)

3.1.3 (5)

3.2 3.2.1

$$\overline{(\overline{A}BC + A\overline{B}C).(AB\overline{C} + ABC)} = F$$

$\overline{A}BC + A\overline{B}C + AB\overline{C} + ABC$ ✓

$\overline{A}BC + A\overline{B}C + AB(\overline{C} + C)$ ✓

$\overline{A}BC + A(\overline{B}C + B)$

$\overline{A}BC + A(C + B)$ ✓

$\overline{A}BC + AC + AB$

$C(\overline{A}B + A) + AB$ ✓

$C(B + A) + AB$ ✓

$BC + AC + AB$ ✓ (6)

3.2.2

$$(AB\overline{C} + A\overline{B}).(\overline{A}B + A\overline{B}C) + (AB\overline{C} + A\overline{B}) = F$$

$AB\overline{C} + A\overline{B}$ ✓

$A(B\overline{C} + \overline{B})$ ✓

$A(\overline{C} + \overline{B})$ ✓

$A\overline{C} + A\overline{B}$ ✓ (4)

[25]

QUESTION 4

8421 CODE X-3 BCD CODE
8421 KODE X-3 BKD KODE

A	B	C	D	F1	F2	F3	F4
0	0	0	0	0	0	1	1
0	0	0	1	0	1	0	0
0	0	1	0	0	1	0	1
0	0	1	1	0	1	1	0
0	1	0	0	0	1	1	1
0	1	0	1	1	0	0	0
0	1	1	0	1	0	0	1
0	1	1	1	1	0	1	0
1	0	0	0	1	0	1	1
1	0	0	1	1	1	0	0
1	0	1	0	X	X	X	X
1	0	1	1	X	X	X	X
1	1	0	0	X	X	X	X
1	1	0	1	X	X	X	X
1	1	1	0	X	X	X	X
1	1	1	1	X	X	X	X

✓ ✓

F1

	$\bar{A}\bar{B}$	$\bar{A}B$	AB	$A\bar{B}$
$\bar{C}\bar{D}$	0	0	X	1
$\bar{C}D$	0	1	X	1
CD	0	1	X	X
$C\bar{D}$	0	1	X	X

✓

$F1 = A + BC + BD$ ✓

$= \overline{\overline{A + BC + BD}}$

$= \overline{\bar{A} \cdot \overline{BC} \cdot \overline{BD}}$ ✓

F2

	$\bar{A}\bar{B}$	$\bar{A}B$	AB	$A\bar{B}$
$\bar{C}\bar{D}$	0	1	X	0
$\bar{C}D$	1	0	X	1
CD	1	0	X	X
$C\bar{D}$	1	0	X	X

✓

$f_2 = \bar{B}D + \bar{B}C + B\bar{C}\bar{D}$ ✓

$= \overline{\overline{\bar{B}D + \bar{B}C + B\bar{C}\bar{D}}}$

$= \overline{\overline{\bar{B}D} \cdot \overline{\bar{B}C} \cdot \overline{B\bar{C}\bar{D}}}$ ✓

F3

	$\bar{A}\bar{B}$	$\bar{A}B$	AB	$A\bar{B}$
$\bar{C}\bar{D}$	1	1	X	1
$\bar{C}D$	0	0	X	0
CD	1	1	X	X
$C\bar{D}$	0	0	X	X

✓

$f_3 = CD + \bar{C}\bar{D}$ ✓

$= \overline{\overline{CD + \bar{C}\bar{D}}}$

$= \overline{\overline{CD} \cdot \overline{\bar{C}\bar{D}}}$ ✓

F4

	$\bar{A}\bar{B}$	$\bar{A}B$	AB	$A\bar{B}$
$\bar{C}\bar{D}$	1	1	X	1
$\bar{C}D$	0	0	X	0
CD	0	0	X	X
$C\bar{D}$	1	1	X	X

✓

$f_4 = \bar{D}$ ✓

Diagram

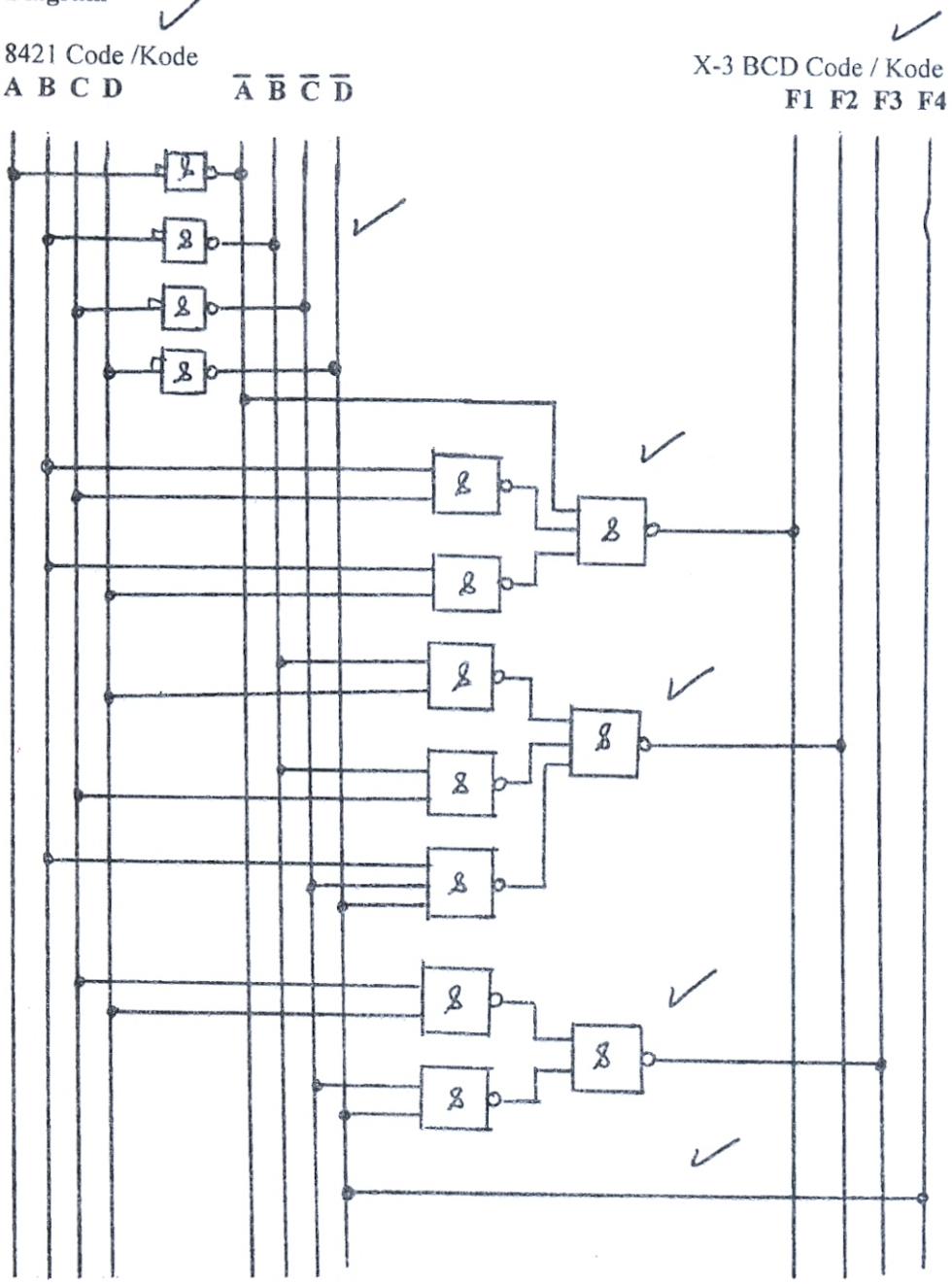
8421 Code /Kode
A B C D
$\overline{A}$ $\overline{B}$ $\overline{C}$ $\overline{D}$
X-3 BCD Code / Kode
F1 F2 F3 F4

[20]

QUESTION 5

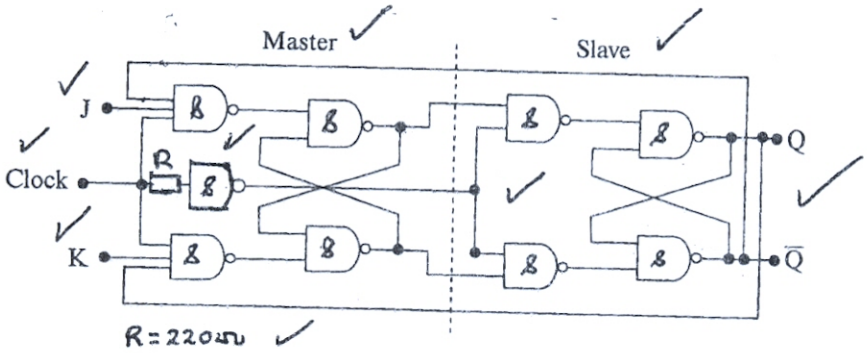

[9]

TOTAL: 100

Copyright reserved