higher education & training

Department:
Higher Education and Training
REPUBLIC OF SOUTH AFRICA

NATIONAL CERTIFICATE

LOGIC SYSTEMS N3

(8080273)

6 August 2021 (X-paper)
09:00–12:00

Drawing instruments may be used. Calculators may NOT be used.

This question paper consists of 7 pages.

213Q1G2106

Copyright reserved

DEPARTMENT OF HIGHER EDUCATION AND TRAINING
REPUBLIC OF SOUTH AFRICA

NATIONAL CERTIFICATE
LOGIC SYSTEMS N3
TIME: 3 HOURS
MARKS: 100

INSTRUCTIONS AND INFORMATION

1. Answer all the questions.
2. Read all the questions carefully.
3. Number the answers according to the numbering system used in this question paper.
4. Start each question on a new page.
5. All the sketches and diagrams must be large, clear and neat.
6. Keep questions and subsections of questions together.
7. Questions must be answered in blue or black ink and all drawings with a pencil.
8. All calculations must be shown.
9. Write neatly and legibly.

Copyright reserved

QUESTION 1: NUMBER SYSTEMS AND ARITHMETIC ELEMENTS

Convert each of the following numbers to their binary equivalents and then complete the calculations in the binary number system.

Show all conversions.

1.1 $FE,D_{16} + 43,2_8 + 1111,0110_2$

Convert the final answer to the hexadecimal system. (4)

1.2 $16,5_{10} \times 2,4_8$

Convert the final answer to the octal system. (5)

1.3 $34,5_{10} – A,1_{16}$

Make use of the two's complement method and convert the final answer to the hexa-decimal system. (5)

1.4 $31,1_8 \div 1,5_{10}$

Convert the final answer to the decimal system. (6)

[20]

QUESTION 2: CODES, DATA AND DATA COMMUNICATION, ENCODERS, DECODERS AND ARITHMETIC ELEMENTS

2.1 What does ASCII stand for? (2)

2.2 Encode the following into the ASCII code:

@co.Za (6)

2.3 Encode or decode the following numbers or codes:

2.3.1 1011 1001 0110 $8\bar{4}\bar{2}\bar{1}$ BCD code to its decimal equivalent.

2.3.2 210_{10} to the Gray code

(2 × 3) (6)

2.4 What does the acronym *BCD* stand for? (1)

2.5 Use the Hamming code and compile data for transmission for the following word: 101101 (5)

[20]

Copyright reserved

QUESTION 3: LOGIC GATES, INTEGRATED CIRCUITS AND LOGIC FAMILIES

3.1 Various options are given as possible answers to the following questions. Choose the answer and write only the letter (A–D) next to the question number (3.1.1–3.1.5) in the ANSWER BOOK.

3.1.1 Which of the following gates can be represented by the following truth table:

A	B	Output
0	0	0
0	1	0
1	0	0
1	1	1

A NAND
B AND
C NOR
D OR

3.1.2 The terms *low speed* and *high speed* applied to logic circuits, refer to the …

A propagation delay time
B rise time
C fall time
D clock speed

3.1.3 The storage element for a dynamic RAM is the …

A diode
B resistor
C flip-flop
D capacitor

3.1.4 Which one of the following is true about emitter coupled logic (ECL) as compared to TTL:

A It has faster switching speed
B It has lower power consumption
C It has better noise immunity
D It can operate at saturation region

3.1.5 The output of a NAND gate with three inputs, A, B, and C, is LOW when:

A A = 1 , B = 1 , C = 0
B A = 0 , B = 0 , C = 0
C A = 1 , B = 1 , C = 1
D A = 1 , B = 0 , C = 0

(5 × 1) (5)

Copyright reserved

3.2 The following IEC symbol is used in digital circuits to represent a gate.

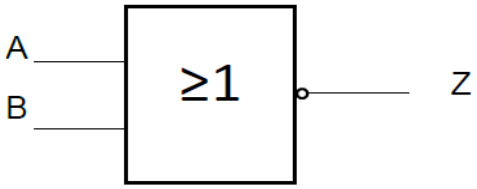

FIGURE 1

3.2.1 Draw and fully label the switch circuit for the gate in FIGURE 1. (3)

3.2.2 Construct a truth table for the gate in FIGURE 1. (2)

3.3 FIGURE 2 below is a circuit diagram that consists of AND gates and OR gates.

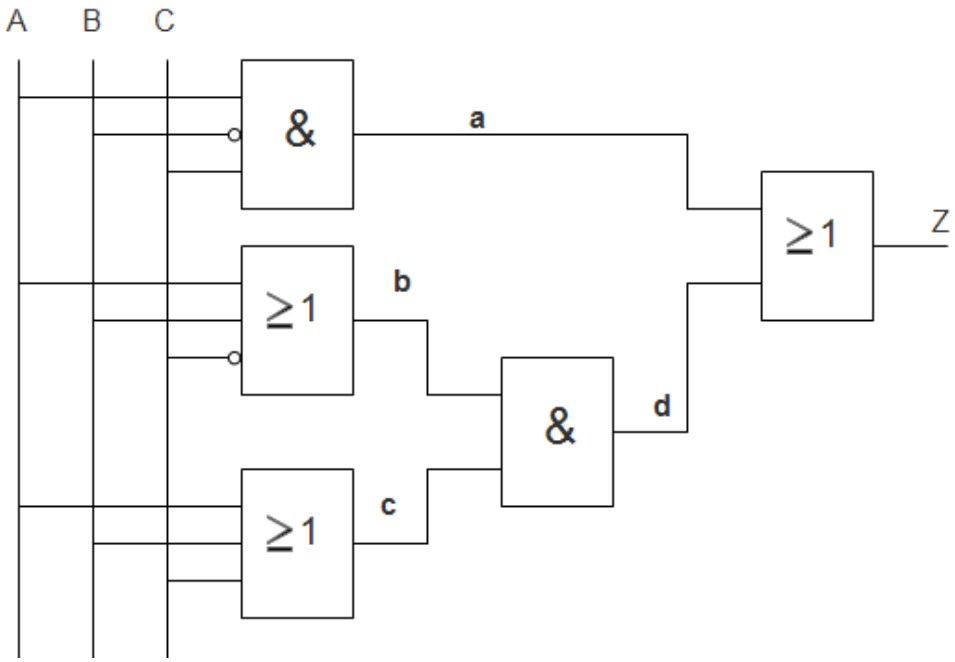

FIGURE 2

Copy and complete the truth table for the circuit in FIGURE 2.

A	B	C	a	b	c	d	Z
0	0	0					
0	0	1					
0	1	0					
0	1	1					
1	0	0					
1	0	1					
1	1	0					
1	1	1					

(5)

Copyright reserved

3.4 Make a neat labelled sketch of the circuit diagram of the Boolean expression below without changing or simplifying the expression.

$$F = \overline{A\bar{B} + \overline{A + \bar{B}} + \overline{AB + C}}$$ (5)

[20]

QUESTION 4: MEMORY ELEMENTS AND MEMORIES

4.1 What do the following acronyms stand for:

4.1.1 ROM

4.1.2 EPROM

4.1.3 CD-ROM

4.1.4 EEPROM

4.1.5 RAM

(5 × 1) (5)

4.2 Draw the logic circuit diagram of a D-type master/slave flip flop that uses NAND gates and inverters. (10)

4.3 Choose an item from COLUMN B that matches a description in COLUMN A. Write only the letter (A–F) next to the question number (4.3.1–4.3.5) in the ANSWER BOOK.

COLUMN A		COLUMN B	
4.3.1	Works on the principle of a laser beam.	A	SRAM
4.3.2	Its memory can be erased by exposure to ultraviolet light.	B	Main memory
4.3.3	This type of memory uses storage elements such as latches.	C	E^2PROM
4.3.4	This is the type of memory that stores data on a capacitor.	D	CD-ROM
4.3.5	It forms part of a central computer.	E	DRAM
		F	EPROM

(5 × 1) (5)

[20]

QUESTION 5: SHIFT REGISTERS AND COUNTERS

5.1 What is a ring counter? (2)

5.2 What is the function of a shift register? (2)

5.3 Indicate whether the following statements are TRUE or FALSE by writing only 'True' or 'False' next to the question number (5.3.1–5.3.6) in the ANSWER BOOK.

5.3.1 A Johnson counter is basically a shift register.

5.3.2 A universal shift register is bidirectional.

5.3.3 Once an up/down counter begins its count sequence, it cannot be reversed.

5.3.4 Module 10 counter is also called a BCD counter.

5.3.5 Master slave flip-flops can be used to design synchronous counters.

5.3.6 The term synchronous refers to events that do not occur at the same time.

(6 × 1) (6)

5.4 Draw a neatly labelled sketch of a 4-bit LEFT-RIGHT shift register using D-type flip-flops and show all the inputs and outputs. (10)
[20]

TOTAL: 100

Copyright reserved