higher education & training

Department:
Higher Education and Training
REPUBLIC OF SOUTH AFRICA

MARKING GUIDELINE

NATIONAL CERTIFICATE

LOGIC SYSTEMS N3

6 August 2021

This marking guideline consists of 7 pages.

Copyright reserved

QUESTION 1: NUMBER SYSTEMS AND ARITHMETIC ELEMENTS

1.1 $FE,D_{16} + 43,2_8 + 1111,0110_2$

$FE,D_{16} = 11111110,1101_2$ √

$43,2_8 = 100011,010_2$ √

$$\begin{array}{r} 11111110,1101 \quad \surd \\ 100011,0100 \quad \surd \\ + \quad 1111,0110 \\ \hline 100110001,0111 \checkmark \end{array}$$

$1\,0011\,0001,0111_2 = 131,7_{16}$ ✓

(4)

1.2 $16,5_{10} \times 2,4_8$

$16,5_{10} = 10000,1_2$ √

$2,4_8 = 010,100_2$ √

$$\begin{array}{r} 10000,1 \\ \times \quad 10,1 \\ \hline 100001 \checkmark \\ + \ 10000100 \checkmark \\ \hline 101001,01 \checkmark \end{array}$$

$101001,01_2 = 51,2_8$ ✓

(5)

1.3 $34,5_{10} - A,1_{16}$

$34,5_{10} = 100010,1_2$ √

$A,1_{16} = 1010,0001_2$ √

$$\begin{array}{r} 100010,1000 \\ -001010,0001 \\ \hline 110101,1110 \\ +\quad\quad\quad\quad 1 \checkmark \\ \hline 110101,1111 \checkmark \end{array}$$

$$\begin{array}{rr} 1c & +\ 100010,1000 \\ \hline & 011000,0111 \checkmark \end{array}$$

$11000,0111_2 = 18.7_{16}$ ✓ (5)

1.4 $31,1_8 \div 1,5_{10}$

$31,1_8 = 011001,001_2$ √

$1,5_{10} = 1,1_2$ √

$$\begin{array}{r} 10000,11 \checkmark \\ 11\overline{)110010,01} \\ \underline{-11} \checkmark \\ 00100 \\ \underline{-11} \checkmark \\ 11 \\ \underline{-11} \checkmark \end{array}$$

$10000,11_2 = 16,75_{10}$ ✓ (6)

[20]

QUESTION 2: CODES, DATA AND DATA COMMUNICATION, ENCODERS AND DECODERS AND ARITHMETIC ELEMENTS

2.1 American Standard Code for Information Interchange (2)

2.2 **@** = 100 0000
c = 110 0011
o= 110 1111
. = 110 0000
Z = 101 1010
a= 110 0001 (6)

2.3 2.3.1 1011 1001 0110
= 5✓ 7✓ 2✓
= 572_{10}

2.3.2 $210_{10} = 11010010_2$ ✓

= 10111011_{gray} ✓ ✓

(2 × 3) (6)

2.4 Binary Coded Decimal (1)

2.5

P_1	P_2	D_1	P_3	D_2	D3	D_4	P_4	D_5	D_6
1	2	3	4	5	6	7	8	9	10
?	?	1	?	0	1	1	?	0	1

1,3,5,7,9	P1 + D1 + D2 + D4
	P1 + 1 + 0 + 0 + 1
	P1 = 0 ✓

2,3,6,7,10	P2 + D1 + D3 + D4 + D6
	P2 + 1 + 1 + 1 + 1
	P2 = 0 ✓

4,5,6,7	P3 + D2 + D3 + D4
	P3 + 0 + 1 + 1
	P3 = 0 ✓

8,9,10	P4 + D5 + D6
	P4 + 0 + 1
	P4 = 1 ✓

(5)

The new word is 0010011101 ✓ **[20]**

QUESTION 3: LOGIC GATES, INTEGRATED CIRCUITS AND LOGIC FAMILIES

3.1 3.1.1 B
3.1.2 A
3.1.3 D
3.1.4 A
3.1.5 C

(5 × 1) (5)

3.2 3.2.1

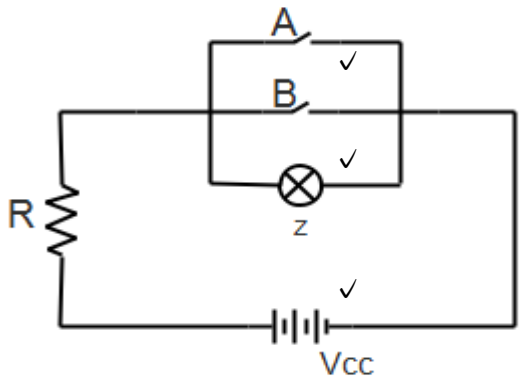

(3)

3.2.2

A	B	Z
0	0	1 √
0	1	0 √
1	0	0 √
1	1	0 √

(4 × 0.5) (2)

3.3

A	B	C	a	b	c	d	Z
0	0	0	0	1	0	0	0
0	0	1	0	0	1	0	0
0	1	0	0	1	1	1	1
0	1	1	0	1	1	1	1
1	0	0	0	1	1	1	1
1	0	1	1	1	1	1	1
1	1	0	0	1	1	1	1
1	1	1	0	1	1	1	1
			✓	✓	✓	✓	✓

(5)

3.4

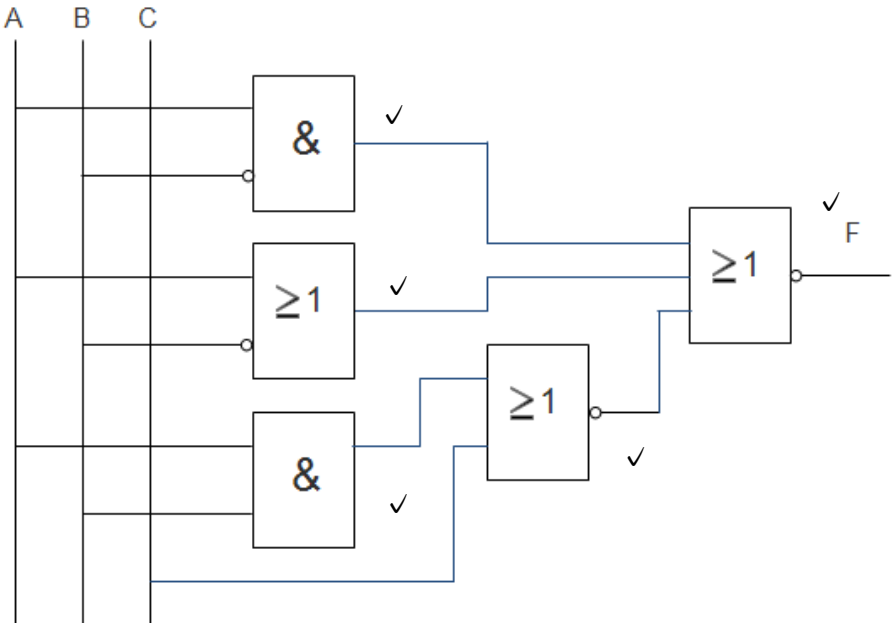

(5)
[20]

QUESTION 4: MEMORY ELEMENTS AND MEMORIES

4.1
4.1.1 ROM – Read Only Memory
4.1.2 EPROM – Erasable Programmable Read Only Memory
4.1.3 CD-ROM – Compact Disc Read Only Memory
4.1.4 EEPROM – Electrically Erasable Programmable Read Only Memory
4.1.5 RAM – Random Access Memory

(5 × 1) (5)

4.2

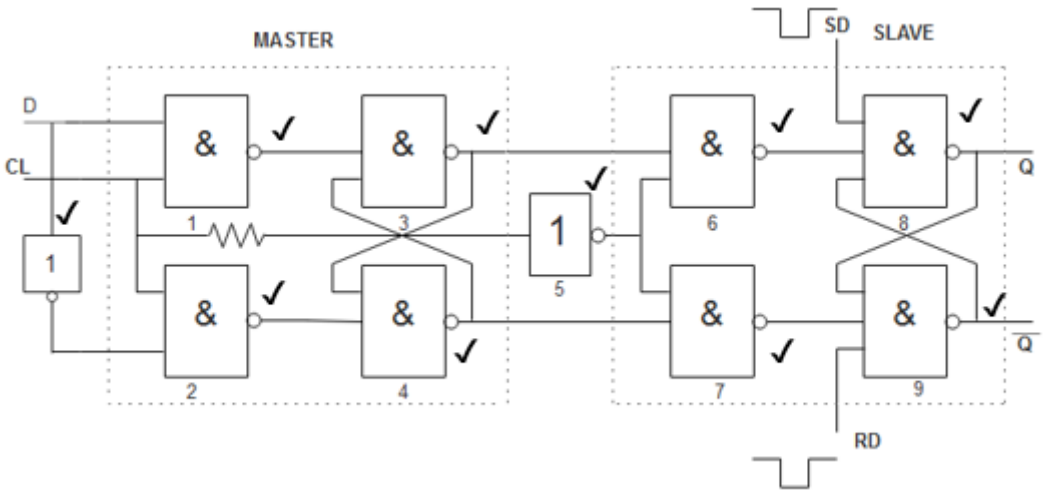

(10)

4.3 4.3.1 D
4.3.2 F
4.3.3 A
4.3.4 E
4.3.5 B

(5 × 1) (5)
[20]

QUESTION 5: SHIFT REGISTERS AND COUNTERS

5.1 A ring counter is a circulating register with a content of only 1 and the rest 0s.
(Any other relevant answer) (2)

5.2 The function of a shift register is to store data temporarily or to convert parallel data to serial data and vice versa. (2)

5.3 5.3.1 True
5.3.2 True
5.3.3 False
5.3.4 True
5.3.5 True
5.3.6 False

(6 × 1) (6)

5.4

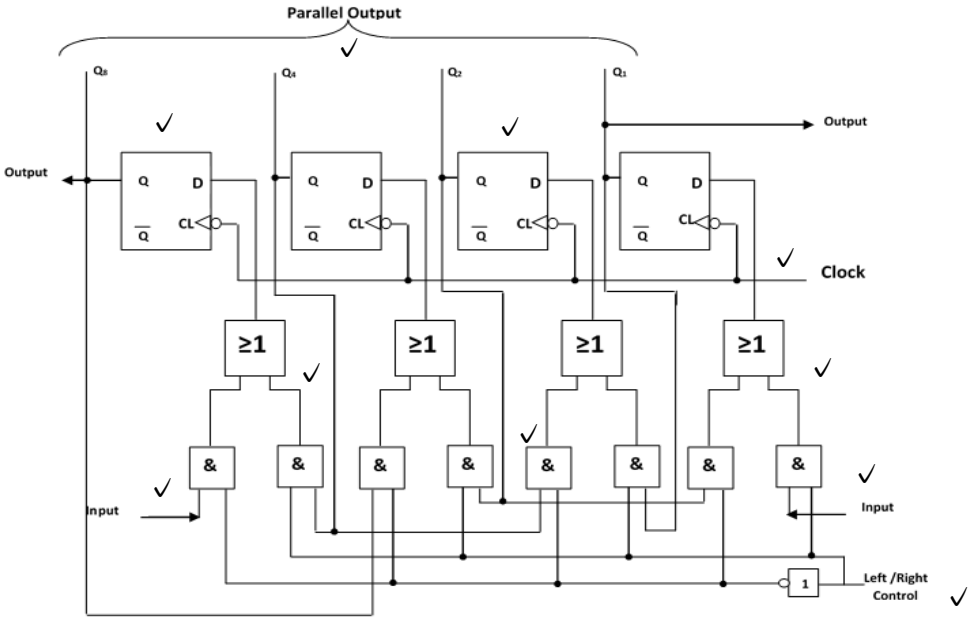

(10)
[20]

TOTAL: 100

Copyright reserved