higher education & training

Department:
Higher Education and Training
REPUBLIC OF SOUTH AFRICA

NATIONAL CERTIFICATE

LOGIC SYSTEMS N3

(8080273)

16 April 2021 (X-paper)
09:00–12:00

Calculators may not be used.

This question paper consists of 7 pages.

201Q1A2116

Copyright reserved

DEPARTMENT OF HIGHER EDUCATION AND TRAINING
REPUBLIC OF SOUTH AFRICA

NATIONAL CERTIFICATE
LOGIC SYSTEMS N3
TIME: 3 HOURS
MARKS: 100

INSTRUCTIONS AND INFORMATION

1. Answer all the questions.
2. Read all the questions carefully.
3. Number the answers according to the numbering system used in this question paper.
4. Start each question on a new page.
5. All sketches and diagrams must be large, clear and neat.
6. Keep questions and subsections of questions together.
7. Answer questions with a black or blue pen and make all drawings in pencil.
8. Show all calculations.
9. Give calculations and calculated answers with THREE fractional radix spaces, for example $10{,}101_2$.
10. Write neatly and legibly.

Copyright reserved

QUESTION 1: NUMBER SYSTEMS

Convert each of the following numbers to their binary equivalents and then follow the instruction given.

NOTE: Show all your calculations.

1.1 $FA,2_{16} + 7,6_8 + 1111,1011_2$

Convert the final answer to the hexadecimal system. (4)

1.2 $34,1_8 \times 12,5_{10}$

Convert the final answer to the octal system. (5)

1.3 $26,6_8 - 1A,C_{16}$

Use the two's complement method and convert the final answer to the decimal system. (5)

1.4 $4B,6_{16} \div 4,5_{10}$

Convert the final answer to the decimal system. (6)
[20]

QUESTION 2: CODES, DATA AND DATA COMMUNICATION, ENCODERS, DECODERS AND ARITHMETIC ELEMENTS

2.1 What does EBCDIC stand for? (2)

2.2 Encode the following into the EBCDIC code:

EqMc2 (5)

2.3 Encode or decode the following numbers or codes:

2.3.1 101001110110 $84\bar{2}\bar{1}$ BCD code to its decimal equivalent (3)

2.3.2 101_{10} to Gray code (3)

2.4 Why does a 2421 BCD decoder have 10 output lines if it can only count to 9? (2)

2.5 Use Hamming code to compile data for transmission of the following word:

101011 (5)
[20]

QUESTION 3: LOGIC GATES, INTEGRATED CIRCUITS AND LOGIC FAMILIES

3.1 Various options are given as possible answers to the following questions. Choose the answer and write only the letter (A–D) next to the question number (3.1.1–3.1.5) in the ANSWER BOOK.

3.1.1 A module 7 counter uses … JK flip-flops to construct.

A 3
B 5
C 7
D 4

3.1.2 The number in a circulating register is 1011. What will the contents of the register be after three clock pulses if the register is set on 'circulator'?

A 1101
B 0111
C 10111
D 1100

3.1.3 When a memory cell uses a capacitive element to store data, it is referred to as ….

A SRAM
B static MOS memory cell
C DRAM
D PROM

3.1.4 Which one of the following is true about TTL as compared to CMOS:

A It consumes more power
B It has better noise immunity
C It is more sensitive to electrostatic discharge
D It uses field effect transistors

3.1.5 The output of a NOR gate with three inputs, A, B, and C, is high when …

A A = 1, B = 1 and C = 0
B A = 0, B = 0 and C = 0
C A = 1, B = 1 and C = 1
D A = 1, B = 0 and C = 0

(5 × 1) (5)

3.2 The following IEC symbol is used in digital circuits to represent a gate.

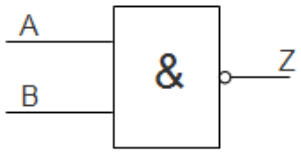

FIGURE 1

3.2.1 Draw the switch circuit for the gate in FIGURE 1. (3)

3.2.2 Construct a truth table for the gate in FIGURE 1 (2)

3.3 FIGURE 2 below is a circuit diagram that consists of AND gates, a NAND gate, an OR gate and a NOT gate.

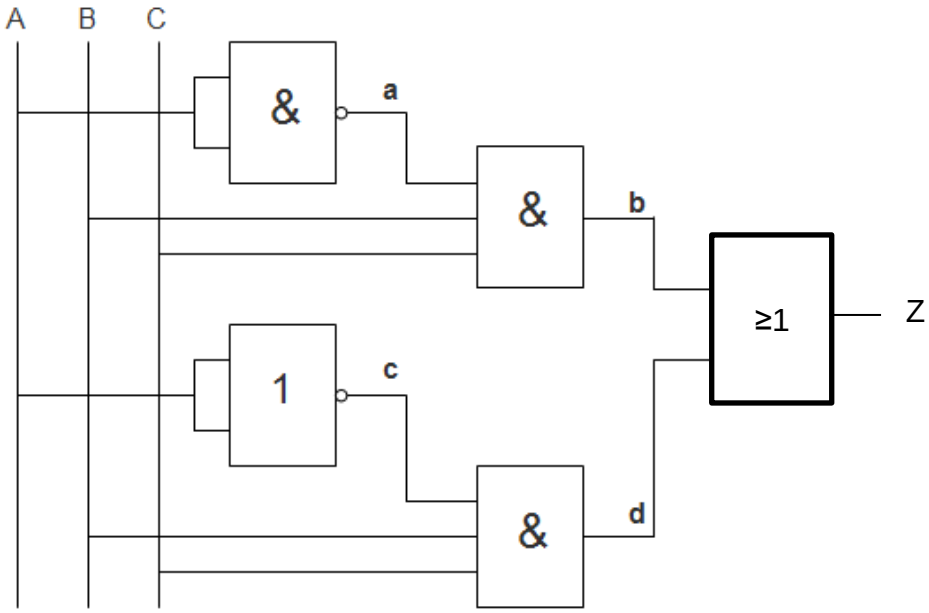

FIGURE 2

Copy and complete the truth table for the circuit in FIGURE 2 in your ANSWER BOOK.

A	B	C	a	b	c	d	Z
0	0	0					
0	0	1					
0	1	0					
0	1	1					
1	0	0					
1	0	1					
1	1	0					
1	1	1					

(5)

3.4 Make a neat, labelled sketch of the circuit diagram for the following Boolean expression without changing or simplifying the expression:

$$Z = \overline{A\bar{B} + A\bar{C} + AB\bar{C}}$$ (5)

[20]

QUESTION 4: MEMORY ELEMENTS AND MEMORIES

4.1 Write each of the following acronyms in full:

4.1.1 RAM

4.1.2 EPROM

4.1.3 PROM

(3 × 1) (3)

4.2 Which input combination of the JK master slave flip-flop will result in the following output states when a clock pulse is applied to the flip-flop:

4.2.1 Toggle state

4.2.2 Unchanged state

4.2.3 SET state

4.2.4 RESET state

(4 × 1) (4)

4.3 When will the JK flip-flop act like a T-type flip-flop? (1)

4.4 Name TWO types of flip-flops which have non-permissible combinations on their inputs. (2)

4.5 Draw a neat, labelled circuit diagram of a JK master slave flip-flop using NAND gates and an inverter. (10)

[20]

QUESTION 5: SHIFT REGISTERS AND COUNTERS

5.1 Indicate whether the following statements are TRUE or FALSE by writing only 'True' or 'False' next to the question number (5.1.1–5.1.6) in the ANSWER BOOK.

5.1.1 To transmit parallel data over a serial cable, the data must first go through data conversion to the serial format.

5.1.2 All flip-flops in an asynchronous counter change states at the same time.

5.1.3 A ripple counter is a synchronous counter.

5.1.4 The storage capacity of a register makes it an important memory type.

5.1.5 A module 5 counter can be constructed using three JK flip-flops.

5.1.6 The decimal equivalent of the largest number that can be stored in a 4-bit binary counter is 15.

(6 × 1) (6)

5.2 What is the purpose of a shift register? (2)

5.3 Give TWO types of module counters which will be used to form a module 15 counter. (2)

5.4 Draw a neat, labelled diagram of a 4-bit series-in-parallel-out shift register that utilises D-type flip-flops. (10)

[20]

TOTAL: 100

Copyright reserved