higher education & training

Department:
Higher Education and Training
REPUBLIC OF SOUTH AFRICA

NATIONAL CERTIFICATE

LOGIC SYSTEMS N3

(8080273)

9 April 2020 (X-paper)
09:00–12:00

Calculators may not be used.

This question paper consists of 9 pages.

205Q1A2009

Copyright reserved

DEPARTMENT OF HIGHER EDUCATION AND TRAINING
REPUBLIC OF SOUTH AFRICA

NATIONAL CERTIFICATE
LOGIC SYSTEMS N3
TIME: 3 HOURS
MARKS: 100

INSTRUCTIONS AND INFORMATION

1. Answer all the questions.
2. Read all the questions carefully.
3. Number the answers according to the numbering system used in this question paper.
4. All sketches and diagrams must be large, clear and neat.
5. Start each question on a new page.
6. Keep questions and subsections of questions together.
7. Answer questions with a black or blue pen and make all drawings with a pencil.
8. Show all calculations.
9. Calculations and calculated answers must have THREE fractional radix spaces, for example $10{,}101_2$.
10. Write neatly and legibly.

Copyright reserved

QUESTION 1: NUMBER SYSTEMS

Convert each of the following numbers to its binary equivalent and complete the calculations in the binary number system. Show all conversions.

1.1 $EF,F_{16} + 37,3_8 + 11101101,1011_2$

Convert the final answer to the octal system. (5)

1.2 $36,25_{10} \times 3,4_8$

Convert the final answer to the hexadecimal system. (5)

1.3 $B,C6_{16} - 4,5_8$

Use the one's complement method and convert the final answer to the octal system. (5)

1.4 $112,75_{10} \div 5,4_8$

Convert the final answer to the decimal system. (5)
[20]

QUESTION 2: CODES, DATA AND DATA COMMUNICATION, ENCODERS, DECODERS AND ARITHMETIC ELEMENTS

2.1 Sketch the block diagram and complete the truth table for a full adder that uses two half adders and an OR gate. (6)

2.2 Encode the following into the ASCII code:

(F6$) (5)

2.3 The state of a 12-bit coder is 100101010111.

What is the content if it represents a:

2.3.1 Gray code

2.3.2 Three-decimal 2421 code

(2 × 3) (6)

2.4 Differentiate between the terms *word* and *word length* as used in logic systems. (1)

2.5 Define the term *alphanumeric code* and give ONE example of an alphanumeric code. (2)
[20]

QUESTION 3: LOGIC GATES, INTEGRATED CIRCUITS AND LOGIC FAMILIES

3.1 Indicate whether the following statements are TRUE or FALSE by writing only 'True' or 'False' next to the question number (3.1.1–3.1.5) in the ANSWER BOOK.

3.1.1 Power is connected to pins 7 and 14 of a 7408 quad two-input AND gate IC to allow voltage for all four AND gates on the IC.

3.1.2 A NOR gate output is low if any of its inputs is low.

3.1.3 An OR array is programmed by blowing fuses to eliminate selected variables from the output functions.

3.1.4 The output of an AND gate with three inputs, A, B and C, is high when A = 1, B = 1, C = 1.

3.1.5 A truth table illustrates how the input level of a gate responds to all the possible output level combinations.

(5 × 1) (5)

3.2 The following IEC symbol is used in digital circuits to represent a gate:

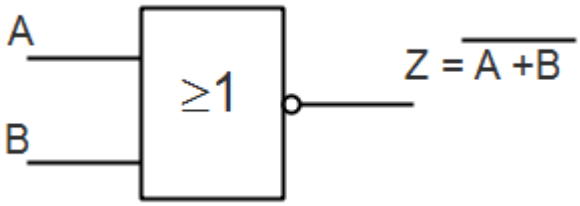

3.2.1 Which gate does the IEC symbol represent? (1)

3.2.2 Draw and fully label the switch circuit for the gate named in QUESTION 3.2.1. (2)

3.2.3 Construct a truth table for the gate named in QUESTION 3.2.1. (2)

3.3 Given below is a circuit diagram that consists of an AND gate, a NAND gate, two NOR gates and an XOR gate.

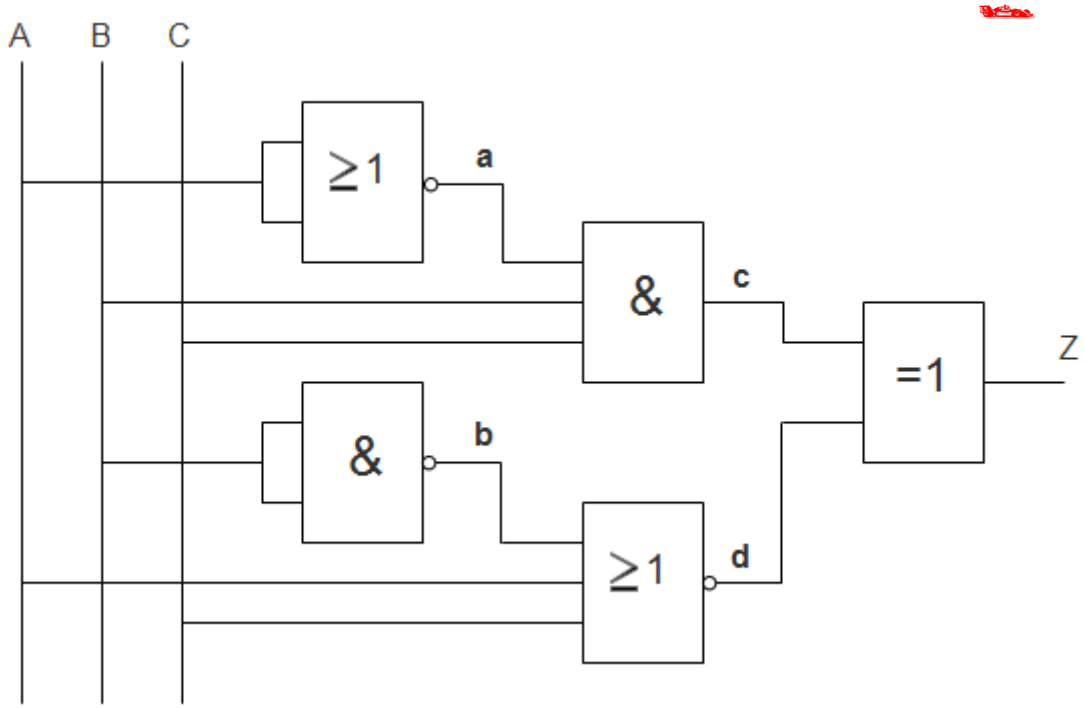

Copy and complete the following truth table for the circuit:

A	B	C	a	b	c	d	Z
0	0	0					
0	0	1					
0	1	0					
0	1	1					
1	0	0					
1	0	1					
1	1	0					
1	1	1					

(5)

3.4 Make a neat labelled sketch of the circuit diagram of the following Boolean expression without changing or simplifying the expression:

$$Z = \overline{A\bar{B}C + \overline{A\bar{B}} + AC}$$

(5)
[20]

QUESTION 4: MEMORY ELEMENTS AND MEMORIES

4.1 Various options are given as possible answers to the following questions. Choose the answer and write only the letter (A–D) next to the question number (4.1.1–4.1.5) in the ANSWER BOOK.

4.1.1 Which ONE of the following statements best describes volatile memory?

A Memory that retains stored information when electrical power is removed
B Magnetic memory
C Nonmagnetic memory
D Memory that loses stored information when electrical power is removed

4.1.2 How can UV-erasable PROMs be recognised?

A The part number always starts with a U as in U12.
B There is a small window on the chip.
C It has a small violet dot next to the #1 pin.
D It is not readily identifiable as it must always be kept under a small cover.

4.1.3 An 8-bit address code can select …

A locations in memory.
B 8 locations in memory 256.
C 65,536 locations in memory.
D 131,072 locations in memory.

4.1.4 Information stored in an EEPROM …

A can be modified by performing a memory-write operation.
B is stored by the manufacturer and cannot be changed.
C is lost if power is interrupted.
D can be erased by applying high voltage to each storage location.

4.1.5 The number of 16k × 4 memories needed to construct a 128k × 8 memory:

A 4
B 16
C 12
D 8

(5 × 1) (5)

4.2 The figure below shows the logic circuit diagram of a D-type master-slave flip-flop.

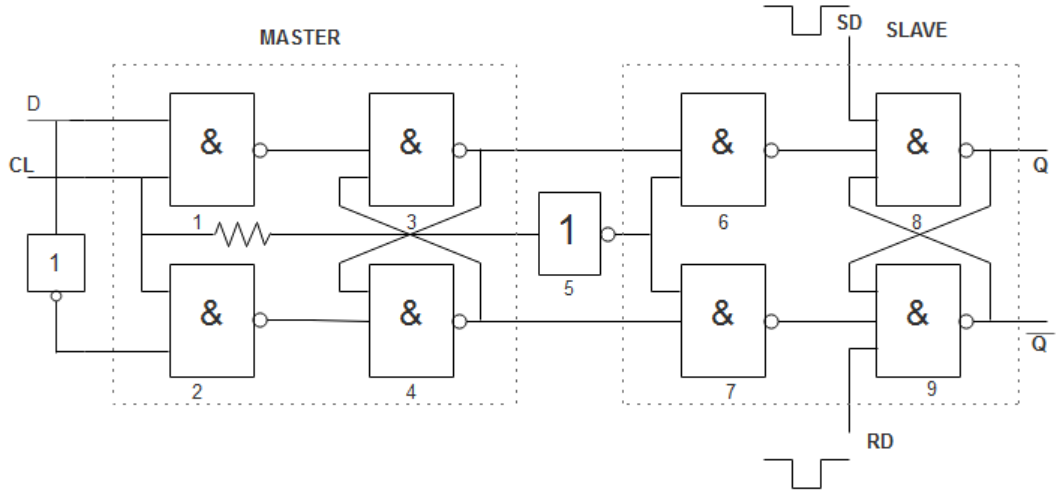

4.2.1 Draw the truth table for the D-type master-slave flip-flop. (2)

4.2.2 Why is the D-type master-slave flip-flop known as a delay flip-flop? (2)

4.2.3 What is the function of the NOT gate between the master and slave on the D-type master-slave flip-flop? (2)

4.3 Write the abbreviation *USB* in full. (2)

4.4 Name THREE types of secondary memories. (3)

4.5 Give FOUR advantages of semiconductor memory. (4)
[20]

QUESTION 5: SHIFT REGISTERS AND COUNTERS

5.1 Various options are given as possible answers to the following questions. Choose the answer and write only the letter (A–D) next to the question number (5.1.1–5.1.5) in the ANSWER BOOK.

5.1.1 The MOD-10 counter is also referred to as a … counter.

A ripple
B BCD
C decade
D circuit

5.1.2 A sequential circuit design is used to …

A decode an end count.
B count in a random order.
C count down.
D count up.

5.1.3 Which segments (by letter) of a seven-segment display must be active to display a digit 6?

A b, c, d, e, f and g
B a, b, c, d and f
C a, c, d, e, f and g
D b, c, d, e and f

5.1.4 The minimum number of flip-flops that can be used to construct a modulus-5 counter:

A 10
B 8
C 5
D 3

5.1.5 Many parallel counters use … presetting whereby the counter is preset on the active transition of the same clock signal used for counting.

A feedback
B ripple
C synchronous
D asynchronous

(5 × 1) (5)

5.2 Indicate whether the following statements are TRUE or FALSE by writing only 'True' or 'False' next to the question number (5.2.1–5.2.5) in the ANSWER BOOK.

5.2.1 A ripple counter is an asynchronous counter.

5.2.2 The MOD number of a Johnson counter will always be equal to half the number of flip-flops in the counter.

5.2.3 Bidirectional shift registers can shift data either right or left.

5.2.4 In a synchronous counter each state is clocked by the same pulse.

5.2.5 Basic counters can be cascaded in parallel to increase the number of data bits that the counter can handle.

(5 × 1) (5)

5.3 Name TWO types of circulating registers. (2)

5.4 Study the diagram below and answer the questions.

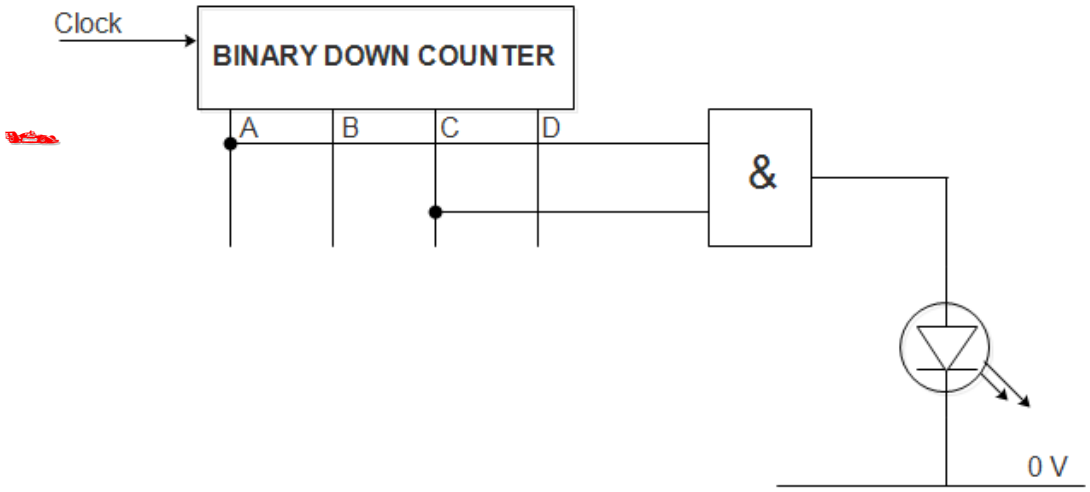

5.4.1 Which binary number or numbers will switch on the LED in the counter? (4)

5.4.2 How many flip-flops are used to construct the diagram? (2)

5.4.3 What will the output of the diagram be after 20 clock pulses if it is not set before the counting commences? (2)

[20]

TOTAL: 100

Copyright reserved