higher education & training

Department:
Higher Education and Training
REPUBLIC OF SOUTH AFRICA

# MARKING GUIDELINE

## NATIONAL CERTIFICATE

## LOGIC SYSTEMS N3

## 9 April 2020

**This marking guideline consists of 7 pages.**

Copyright reserved

✓ = 1 mark √ = ½ mark

## QUESTION 1: NUMBER SYSTEMS

1.1 $EF,F_{16} + 37,3_8 + 11101101,1011_2$

$EF,F_{16} = 11101111,1111_2$ √

$37,3_8 = 011111,011_2$ √

$$\begin{array}{r} 11101111,1111 \\ 00011111,0110 \quad \surd \\ + \ \underline{11101111,1111} \\ 111111101,0000 \quad \surd \end{array}$$

$111111101,0000 = 775,0_8$ √

(5)

1.2 $36,25_{10} \times 3,4_8$

$36,25_{10} = 100100,01_2$ √

$3,4_8 = 011,100_2$ √

$$\begin{array}{r} 100100,01 \\ \times \ \underline{11,10} \\ 100100010\checkmark \\ 1001000100 \\ + \ \underline{10010001000}\checkmark \\ 1111110,1110 \ \checkmark \end{array}$$

$1111110,1110 = 7E,E_{16}$✓

(5)

1.3 $B,C6_{16} - 4,5_8$

$B,C6_{16} = 1011,11000110_2$ √

$4,5_8 = 100,101_2$ √

```
      1011,11000110
1c    1011,01011111   √
     10111,00100101
+                1   √
      111,00100110
```

$111,00100110 = 7,116_8$ √ (5)

1.4 $112,75_{10} \div 5,4_8$

$112,75_{10} = 1110000,11_2$

$5,4_8 = 101,100_2$

```
          10100,1✓
1011 ) 11100001,1
      -1011✓
          1100
         -1011✓
            1011
           -1011✓
```

$10100,1 = 20,5_{10}$ ✓ (5)

**[20]**

## QUESTION 2: CODES, DATA AND DATA COMMUNICATION, ENCODERS, DECODERS AND ARITHMETIC ELEMENTS

2.1

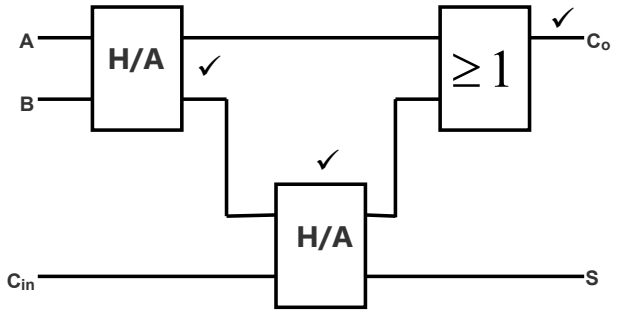


| A | B | $C_{in}$ | S | $C_o$ |
|---|---|---|---|---|
| 0 | 0 | 0 | 0 | 0 |
| 0 | 0 | 1 | 1 | 0 |
| 0 | 1 | 0 | 1 | 0 |
| 0 | 1 | 1 | 0 | 1 |
| 1 | 0 | 0 | 1 | 0 |
| 1 | 0 | 1 | 0 | 1 |
| 1 | 1 | 0 | 0 | 1 |
| 1 | 1 | 1 | 1 | 1 |

(6)

2.2
**(** 010 0111✓
**F** 100 0110✓
**6** 011 0110✓
**$** 010 0100✓
**)** 010 1000✓ (5)

2.3 2.3.1 $1+0+0+1+\quad 0+1+0+1+\quad 0+1+1+1$
$=1\ 1\ 0\ 1$✓ $1\ 1\ 1\ 1$✓ $1\ 1\ 0\ 0$✓

2.3.2 1001 0101 0111
= 3✓ 5✓ 7✓

(2 × 3) (6)

2.4 A word is two or more bytes while word length is the number of bits in a word. (1)

2.5 An alphanumeric code is a binary code for a group of elements consisting of decimal digits, letters of the alphabet (both in uppercase and lowercase) and a certain number of special symbols,✓ e.g. ASCII.✓ (2)
**[20]**

## QUESTION 3: LOGIC GATES, INTEGRATED CIRCUITS AND LOGIC FAMILIES

3.1 3.1.1 False
3.1.2 False
3.1.3 True
3.1.4 True
3.1.5 False

(5 × 1) (5)

3.2 3.2.1 NOR gate (1)

3.2.2

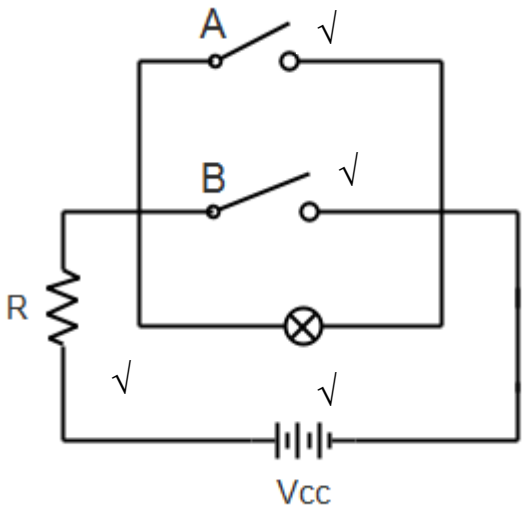


(2)

3.2.3

| A | B | Z | |
|---|---|---|---|
| 0 | 0 | 1 | √ |
| 0 | 1 | 0 | √ |
| 1 | 0 | 0 | √ |
| 1 | 1 | 0 | √ |

(2)

3.3

| A | B | C | a | b | c | d | Z |
|---|---|---|---|---|---|---|---|
| 0 | 0 | 0 | 1 | 1 | 0 | 0 | 0 |
| 0 | 0 | 1 | 1 | 1 | 1 | 0 | 1 |
| 0 | 1 | 0 | 1 | 0 | 0 | 1 | 1 |
| 0 | 1 | 1 | 1 | 0 | 0 | 0 | 0 |
| 1 | 0 | 0 | 0 | 1 | 0 | 0 | 0 |
| 1 | 0 | 1 | 0 | 1 | 0 | 0 | 0 |
| 1 | 1 | 0 | 0 | 0 | 0 | 0 | 0 |
| 1 | 1 | 1 | 0 | 0 | 0 | 0 | 0 |
| | | | ✓ | ✓ | ✓ | ✓ | ✓ |

(5)

3.4

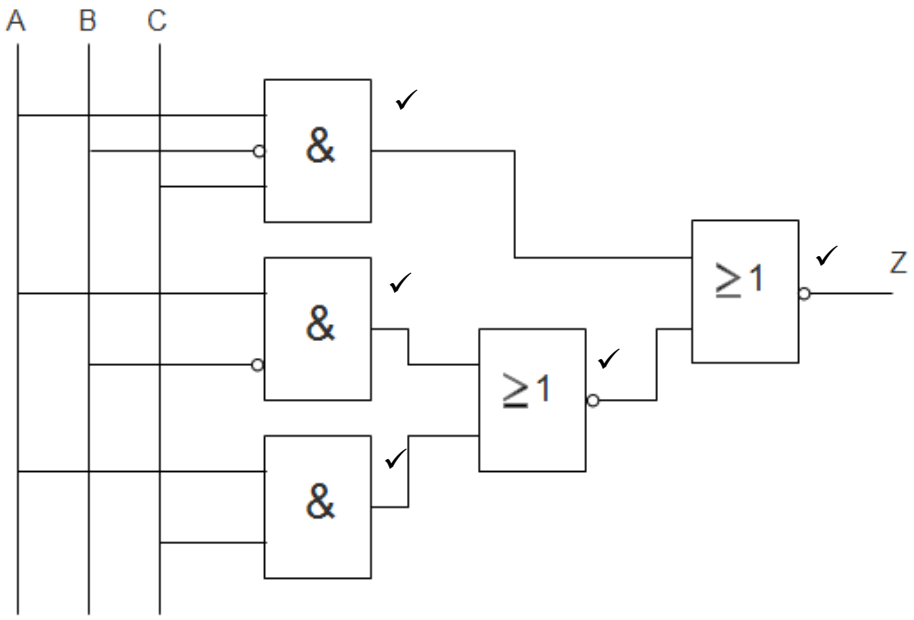


(5)
**[20]**

## QUESTION 4: MEMORY ELEMENTS AND MEMORIES

4.1
4.1.1 D
4.1.2 C
4.1.3 A
4.1.4 D
4.1.5 B

(5 × 1) (5)

4.2 4.2.1

| D | Q | $\bar{Q}$ | |
|---|---|---|---|
| 0 | 0 | 1 | ✓ |
| 1 | 1 | 0 | ✓ |

(2)

4.2.2 It is called a delay flip-flop because it delays the flow of data✓ by at least one clock pulse.✓ (2)

4.2.3 The role of the NOT gate between the master and slave is to make sure that they do not switch ✓at the same time. ✓ (2)

4.3 Universal serial bus (2)

4.4
- CD
- DVD
- Magnetic tape
- Punch cards
- Magnetic drum
- Paper tape
- USB

(Any 3 × 1) (3)

4.5
- Low production cost
- Reliability
- Low power consumption
- Greater/higher capacity (4)

**[20]**

## QUESTION 5: SHIFT REGISTERS AND COUNTERS

5.1
5.1.1 C
5.1.2 B
5.1.3 C
5.1.4 D
5.1.5 C

(5 × 1) (5)

5.2
5.2.1 True
5.2.2 False
5.2.3 True
5.2.4 True
5.2.5 False

(5 × 1) (5)

5.3
- Johnson counter
- Ring counter (2)

5.4 5.4.1
1010
1011
1110
1111 (4)

5.4.2 4✓✓ (2)

5.4.3 0011✓✓ (2)

**[20]**

**TOTAL: 100**

Copyright reserved