0000000000

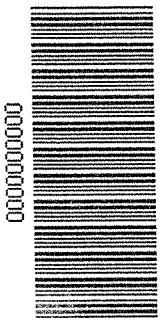

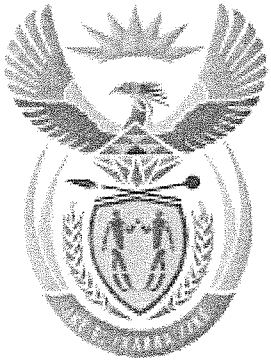

higher education & training

Department:
Higher Education and Training
REPUBLIC OF SOUTH AFRICA

T870(E)(A7)T
APRIL EXAMINATION

NATIONAL CERTIFICATE

LOGIC SYSTEMS N3

(8080273)

7 April 2015 (Y-Paper)
13:00–16:00

Calculators may NOT be used.

This question paper consists of 9 pages.

ENGINEERING

Copyright reserved

DEPARTMENT OF HIGHER EDUCATION AND TRAINING
REPUBLIC OF SOUTH AFRICA

NATIONAL CERTIFICATE
LOGIC SYSTEMS N3
TIME: 3 HOURS
MARKS: 100

INSTRUCTIONS AND INFORMATION

1. Answer ALL the questions.
2. Read ALL the questions carefully.
3. Number the answers according to the numbering system used in this question paper.
4. Write neatly and legibly.

ENGINEERING

Copyright reserved

SECTION A

QUESTION 1

1.1 Various options are given as possible answers to the following questions. Choose the answer and write only the letter (A–D) next to the question number (1.1.1–1.1.8) in the ANSWER BOOK.

1.1.1 A parity bit is …

A used to indicate uppercase letters.
B used to detect errors.
C the first bit in a byte.
D the last bit in a byte. (1)

1.1.2 The Hamming code is used in the digital computer to …

A detect the error.
B correct the error.
C analyse the error.
D either detect or correct the error. (1)

1.1.3 What is the output state of an OR gate if the inputs are 0 and 1?

A 0
B 1
C 3
D 2 (1)

1.1.4 In standard TTL logic, the totem-pole stage refers to …

A the multi-emitter input stage.
B the output buffer.
C the phase-splitter.
D open-collector output stage. (1)

1.1.5 A D-type flip-flop can be made from a …

A JK flip-flop and an inverter.
B RS flip-flop.
C RS flip-flop and an inverter.
D Both (A) and (B) (1)

1.1.6 How many flip-flops are required to make a MOD-32 binary counter?

A 3
B 45
C 5
D 6 (1)

ENGINEERING

Copyright reserved

1.1.7 A register capable of shifting its binary information contents either to the right or the left is called a ...

A parallel register.
B serial register.
C shift register.
D storage register. (2)

1.1.8 How many unique states does a 3-bit asynchronous counter have?

A 2
B 4
C 8
D 16 (2)

1.2 Indicate whether the following statements are TRUE or FALSE. Choose the answer and write only 'true' or 'false' next to the question number (1.2.1–1.2.9) in the ANSWER BOOK.

1.2.1 The serial-in/parallel-out shift registers transfers data from one parallel data bus to another parallel data bus one bit at a time across a single line. (1)

1.2.2 Another term used to describe up/down counters is bidirectional. (1)

1.2.3 In an even-parity system, the data 1010011 will produce a parity bit equal to one. (2)

1.2.4 Edge-triggered flip-flops can be identified by the triangle on the clock input. (1)

1.2.5 ASCII codes are used strictly for representing the letters, digits et cetera. (1)

1.2.6 The most significant digit is the rightmost, largest-weight digit in a number. (1)

1.2.7 An output of an exclusive-OR (XOR) gate is 1 only when the inputs are different. (1)

1.2.8 Decimal numbers can be converted into binary by dividing by two and recording the remainders. (1)

1.2.9 EBCDIC codes are used strictly for representing the letters in the alphabet. (1)

ENGINEERING

Copyright reserved

1.3 Choose a term from COLUMN B that matches a description in COLUMN A. Write only the letter (A–E) next to the question number (1.3.1–1.3.5) in the ANSWER BOOK.

COLUMN A		COLUMN B	
1.3.1	It is a modified ring counter	A	asynchronous counter
1.3.2	It counts both up and down, under command of a control input	B	synchronous counter
1.3.3	It is known as a parallel or ripple counter	C	Johnson counter
1.3.4	It counts from 0 to 9 and then recycles to 0 again	D	decade counter
1.3.5	It is also known as a series counter	E	up/down counter

(5 × 1) (5)

[25]

TOTAL SECTION A: 25

ENGINEERING

SECTION B

QUESTION 2

2.1 Use ten's complement to subtract 78_{16} from 10010111_2. (4)

2.2 Multiply 37_8 with 1000_2 in the binary number system and convert your answer to the decimal number system. (4)

2.3 Divide 64_{16} by 1010_2 using binary and then convert your answer to hexadecimal. (4)

2.4 Draw a labelled block diagram of a 3-bit parallel subtractor. (6)

2.5 Convert decimal 21_{10} to Excess-3 (XS3). (2)

2.6 Decode the following word which is in ASCII code:

100 0001
101 0011
100 0011
100 1001
100 1001 (5)

2.7 Draw the truth table of a 2421 decoder. (5)
[30]

QUESTION 3

3.1 Study FIGURE 1 and answer the questions:

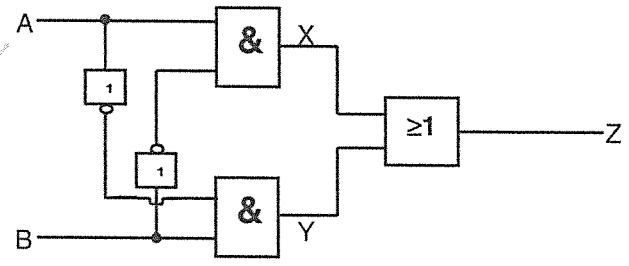

FIGURE 1

ENGINEERING

3.1.1 Redraw and complete TABLE 1 below by making use of FIGURE 1 on page 6.

INPUTS		OUTPUTS		
A	B	X	Y	Z
0	0			
0	1			
1	0			
1	1			

TABLE 1 (6)

3.1.2 What type of gate is represented by output Y in QUESTION 3.1.1? (2)

3.1.3 Draw the IEC symbol for the gate in QUESTION 3.1.2. (2)

3.2 Briefly discuss the advantage and disadvantage of using bipolar IC as compared to MOS IC. (4)

3.3 What is the maximum number of units that can be contained in small scale integration (SSI) integrated circuit (IC)? (1)
[15]

QUESTION 4: MEMORY ELEMENTS AND MEMORIES

4.1 Explain the meaning of the following with regard to clock inputs:

4.1.1 Small triangle at clock input. (2)

4.1.2 Circle symbol followed by triangle at clock input. (2)

4.2 Draw a logic circuit for a clocked JK flip-flop and explain what happens to output Q when clocked if J = K = 0; J = K = 1 and J = 1, K = 0 (7)

4.3 What is the meaning of the following?

4.3.1 CD-RW (2)

4.3.2 CD-R (2)
[15]

ENGINEERING

QUESTION 5: SHIFT REGISTERS AND COUNTERS

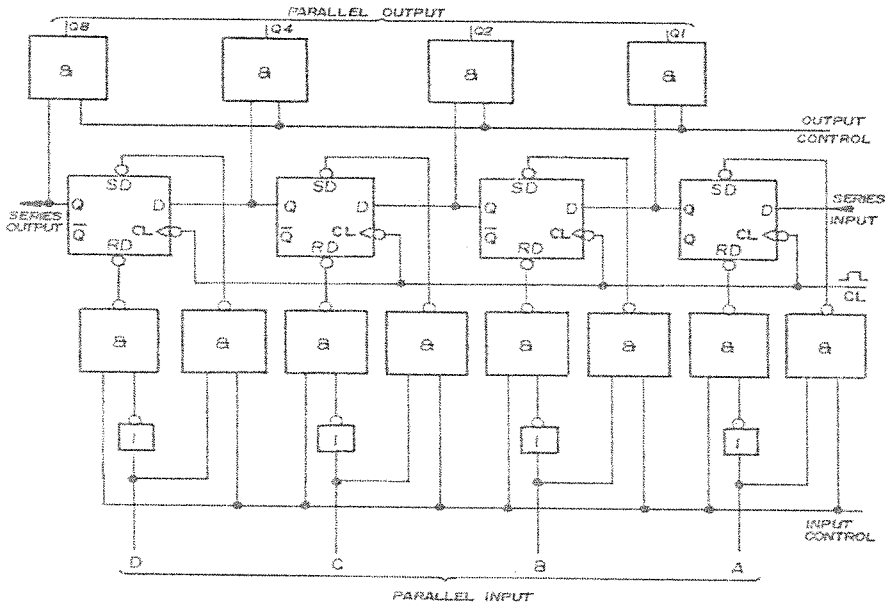

FIGURE 2

5.1 If the initial content of FIGURE 2 is 1111;

5.1.1 What will the parallel output be if two clock pulses are applied to FIGURE 2, after the number 0011 has been placed into the parallel input of the register? (2)

5.1.2 What will the parallel output be if the same number 0011 has been placed into the series input of the register after the first and third clock pulse? (2)

5.2 Draw a labelled sketch of a Johnson counter. (5)

Copyright reserved

5.3 Study FIGURE 3 below and answer the questions.

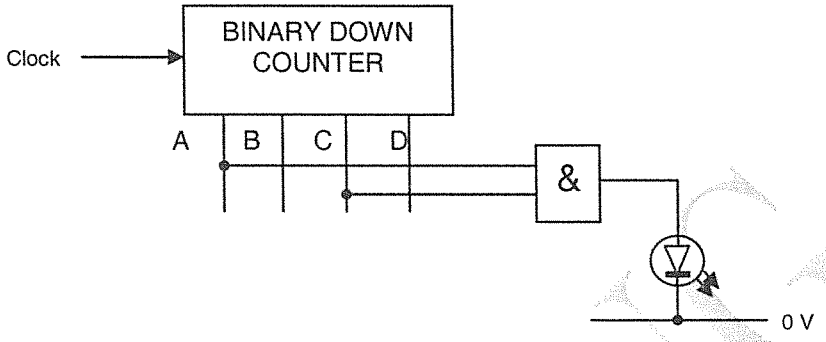

FIGURE 3

5.3.1 Which binary number(s) will switch on the LED in the counter in FIGURE 3? (4)

5.3.2 What will the output of FIGURE 3 be after twenty clock pulses if it is not set before the counting commences? (2)
[15]

TOTAL SECTION B: 75
GRAND TOTAL: 100

ENGINEERING

Copyright reserved