higher education & training

Department:
Higher Education and Training
REPUBLIC OF SOUTH AFRICA

MARKING GUIDELINE

NATIONAL CERTIFICATE

LOGIC SYSTEMS N2

4 APRIL 2018

This marking guideline consists of 6 pages.

Copyright reserved

SECTION A

QUESTION 1

1.1
1.1.1 D
1.1.2 C
1.1.3 B
1.1.4 A
1.1.5 B
1.1.6 A
1.1.7 A
1.1.8 B
1.1.9 A
1.1.10 C

(10 × 1) (10)

1.2
1.2.1 False
1.2.2 False
1.2.3 True
1.2.4 True
1.2.5 False

(5 × 1) (5)
[15]

TOTAL SECTION A: 15

SECTION B

QUESTION 2

2.1
0 – 0 = 0 ✓
1 – 0 = 1 ✓
1 – 1 = 0 ✓
0 – 1 = 1 on condition that 1 is borrowed from MSD to its left ✓ (4)

2.2 2.2.1

2^5	2^4	2^3	2^2	2^1	2^0	
1	1	1	0	0	0	✓
32	16	8	0	0	0	

$111000_2 = 32 + 16 + 8 + 0 + 0 + 0$ ✓
$= 54_{10}$ ✓

2.2.2

2^5	2^4	2^3	2^2	2^1	2^0	
1	1	0	0	1	1	✓
32	16	0	0	2	1	

$110011_2 = 32 + 16 + 0 + 0 + 2 + 1$ ✓
$= 51_{10}$ ✓

(2 × 3) (6)

2.3 2.3.1

2	27	Remainder
2	13	1
2	6	1
2	3	0
2	1	1
2	0	1

✓ ✓

$27_{10} = 11011_2$ ✓

2.3.2

2	83	Remainder
2	41	1
2	20	1
2	10	0
2	5	0
2	2	1
2	1	0
2	0	1

✓ ✓

$83_{10} = 1010011_2$ ✓

(2 × 3) (6)

2.4 $120_{10} \div 15_{10}$

	64	**32**	**16**	**8**	**4**	**2**	**1**	
120=	1	1	1	1	0	0	0	✓
15 =				1	1	1	1	✓

```
                                1   0   0   0 ✓
1   1   1   1 | 1   1   1   1   0   0   0
                1   1   1   1
                0   0   0   0   0   0
                        0   0   0   0
                        0   0   0   0   0
                            0   0   0   0 ✓
                            0   0   0   0
```

(4)

2.5 The 2421 BCD code is a weighted code as well as a self-complementing code. ✓ To convert the same method is used up to decimal 4 and thereafter the numbers become the complements of the previous numbers. ✓ ✓ (3)

2.6 101110101000 XS3 to decimal

1011	**1010**	**1000**
-11	-11	-11
1000	0111	0101
↓	↓	↓
8 ✓	7 ✓	4 ✓

1011	**1010**	**1000**
↓	↓	↓
11	10	8
-3	-3	-3
8 ✓	7 ✓	4 ✓

101110101000 XS3 = 874_{10} ✓ (4)

2.7

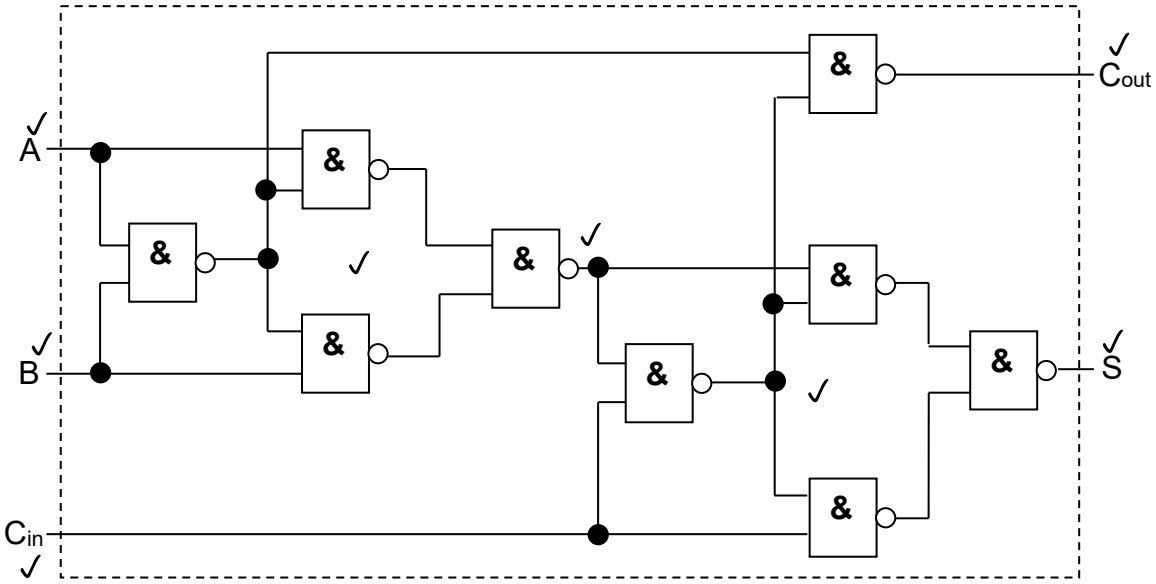

(8)
[35]

QUESTION 3

3.1 3.1.1 OR gate (2)

3.1.2

✓ **A**	✓ **B**	✓ **Z**
0	0	0
0	1	1
1	0	1
1	1	1

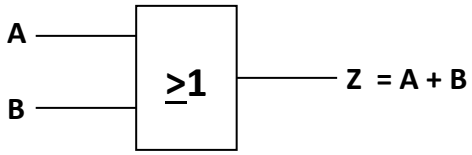

(6)

3.2 3.2.1 SR master-slave (2)

3.2.2

S	R	Q	$\overline{Q}$	
0	0	Q_n	$\overline{Q_n}$	✓ ✓
0	1	0	1	✓
1	0	1	0	
1	1	Invalid		

(3)

3.2.3

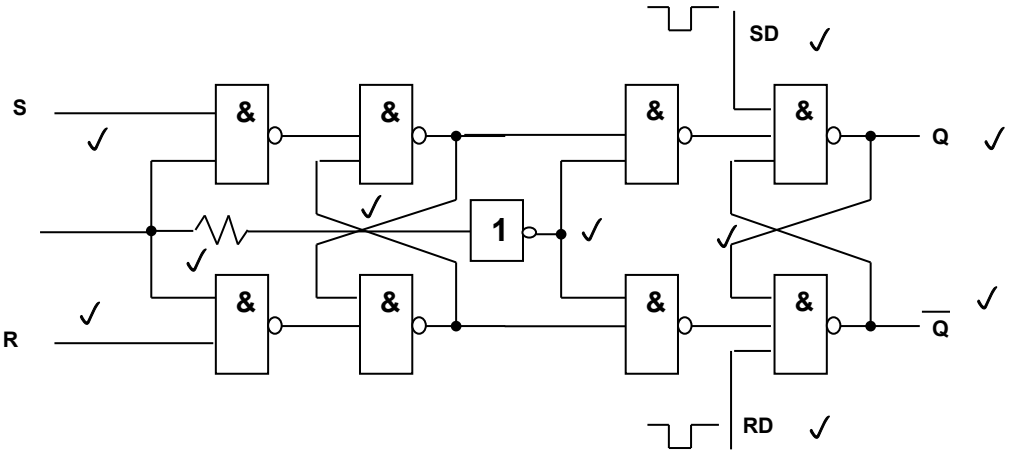

(10)

3.3

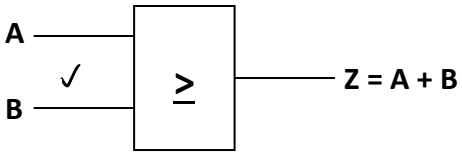

(2)
[25]

QUESTION 4

4.1

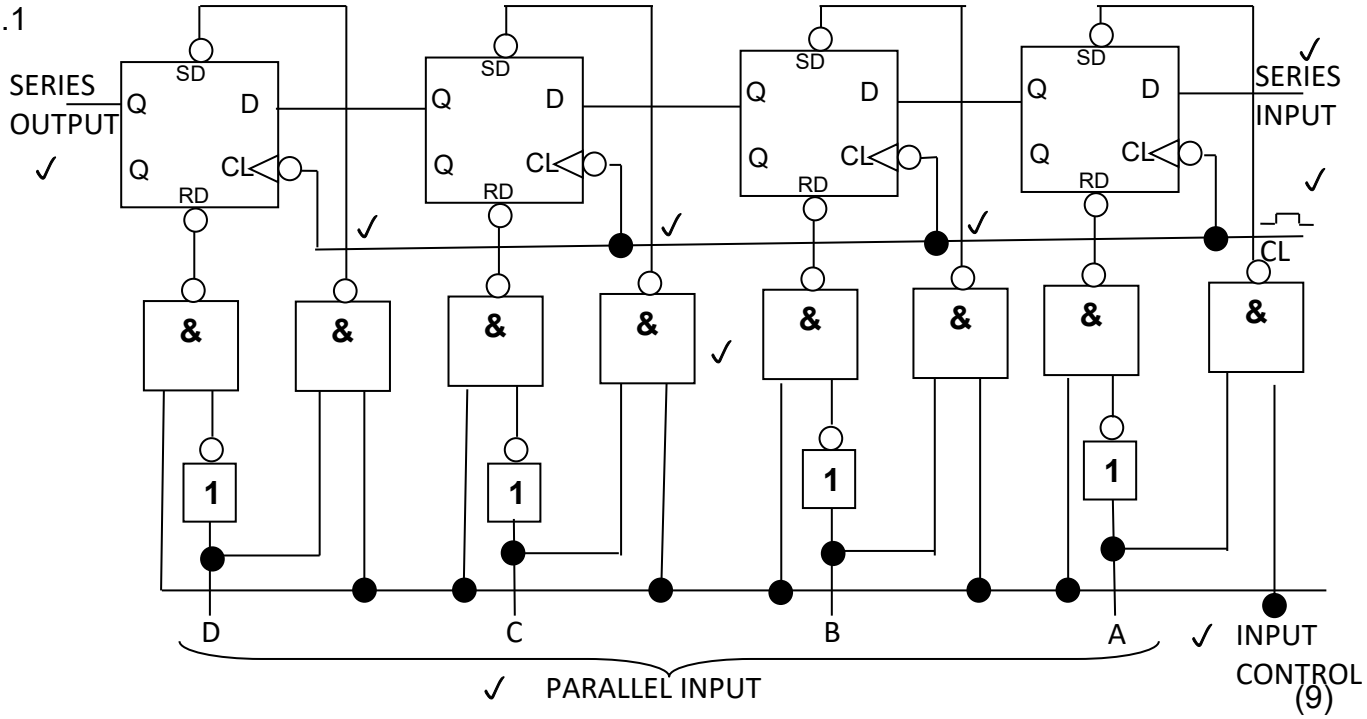

(9)

4.2

Clock pulses	✓	✓	✓	✓
	8	**4**	**2**	**1**
0	0	0	0	0
1	0	0	0	1
2	0	0	1	
3	0	0	1	1
4	0	1	0	0
5	0	1	0	1
6	0	1	1	
7	0	1	1	1
8	1	0	0	0
9	1	0	0	1
10	0	0	0	
11	0	0	0	1

✓ (for correctness)

(5)

4.3

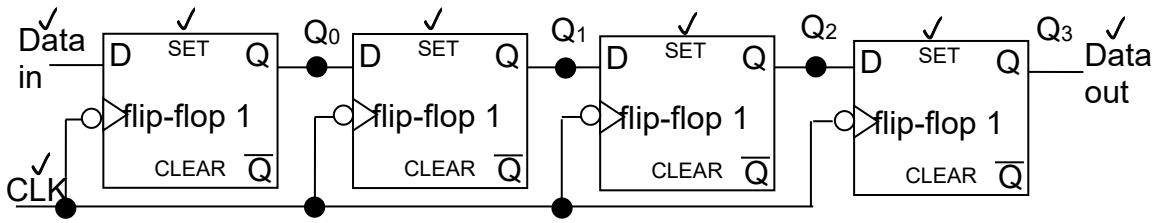

(7)

4.4 The output of series-in series-out (SISO) is in series, ✓✓ while the output of series-in parallel-out (SIPO) is in parallel. ✓✓ (2 + 2) (4)

[25]

TOTAL: 100

Copyright reserved