higher education & training

Department:
Higher Education and Training
REPUBLIC OF SOUTH AFRICA

MARKING GUIDELINE

NATIONAL CERTIFICATE

INSTRUMENT TRADE THEORY N2

9 April 2020

This marking guideline consists of 7 pages.

Copyright reserved

SECTION A

QUESTION 1

1.1 A
1.2 C
1.3 B
1.4 A
1.5 C

(5 × 1) **[5]**

QUESTION 2

2.1 True
2.2 False
2.3 True
2.4 True
2.5 True

(5 × 1) **[5]**

QUESTION 3

3.1 Boyle’s law
3.2 Gauge pressure
3.3 Volumetric flowmeter OR Positive displacement flowmeter
3.4 Bernoulli's theorem
3.5 Density

(5 × 2) **[10]**

TOTAL SECTION A: 20

SECTION B

QUESTION 4

4.1

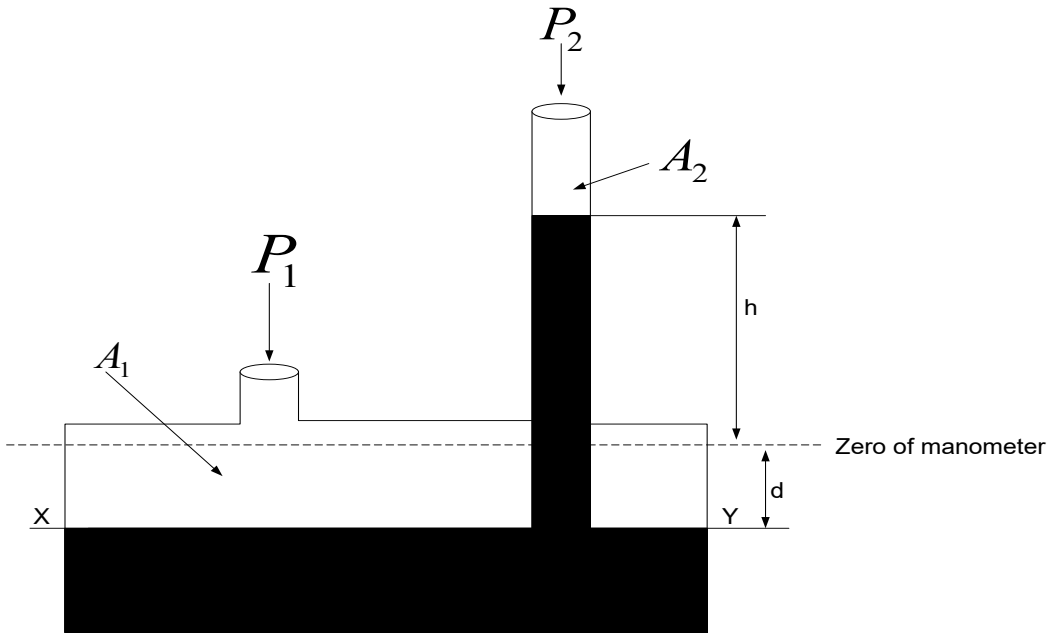

(2 marks for the drawing)
(2 marks for any two correct labels) (4)

4.2

$$\Delta P = \rho g h \left[\frac{A_2}{A_1} + 1\right]$$

$$h = \frac{\Delta P}{\rho g\left[\frac{A_2}{A_1}+1\right]} \checkmark\checkmark$$

$$= \frac{100\,000}{13\,600 \times 10\left[\frac{0{,}008}{0{,}002} + 1\right]}$$

$$= 0{,}147\ m \checkmark\checkmark$$ (4)

4.3 4.3.1

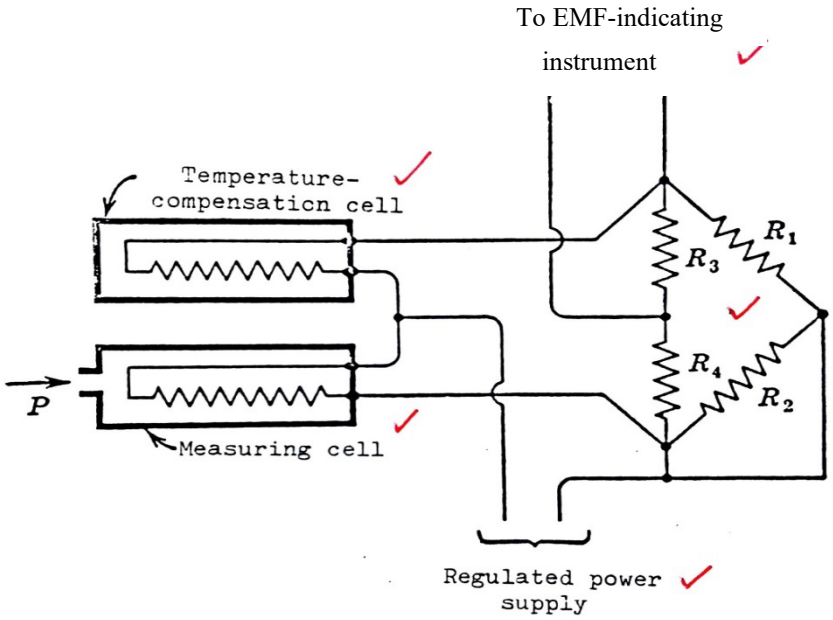

(5)

4.3.2
- The circuit is connected to a regulated power supply. The current flowing through the measuring cell and the reference cells will cause their elements to heat up
- resulting in the change in resistances of the elements.
- Since these elements are in different arms of the bridge, their increase in resistance will cancel out
- and the bridge will remain balanced.
- When a vacuum is connected to the measuring cell, the gas decreases, thus less heat is conducted away from the element causing the temperature to increase.
- The resistance of the element increases resulting in the bridge being unbalanced.
- An indicating instrument is connected across the bridge calibrated directly in vacuum units. (7)

[20]

QUESTION 5

5.1
- Celsius scale
- Kelvin scale (2)

5.2
- A thermostat is a device (usually in the form of a convex bimetal disk) used to sense overtemperature conditions✓ and automatically shuts off power to the heater if the water temperature exceeds a pre-set limit.✓
- A thermometer is a temperature measuring device.✓✓ (4)

5.3

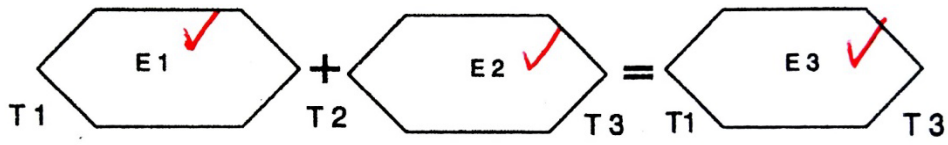

(3)

5.4 The resistance thermometer operates on the principle that the resistance of a metalic conductor changes linearly with temperature changes.✓✓ The resistance/temperature relationship of a typical resistance bulb is given by $R_T = R_0[1 + \alpha T]$.

Where : R_T =the resistance at some temperature✓
R_0 = the resistance at 0°C✓
α = temperature coefficient of material [/°C]✓
T = temperature at which the resistance is required [°C]✓ (6)

5.5 $R_T = R_0(1 + \propto T)$ ✓
15 = 12(1 + 0,004 T)✓
1,25 = 1 + 0,004 T✓
$\Longrightarrow T = \frac{1,25-1}{0,004} = 62,5$°C✓✓

(5)
[20]

QUESTION 6

6.1 For a stream of ideal fluid, in a steady flow,✓ with no frictional forces involved and acting only under gravity,✓ the sum of the pressure energy, kinetic energy and the potential energy✓ is constant.✓ (4)

6.2

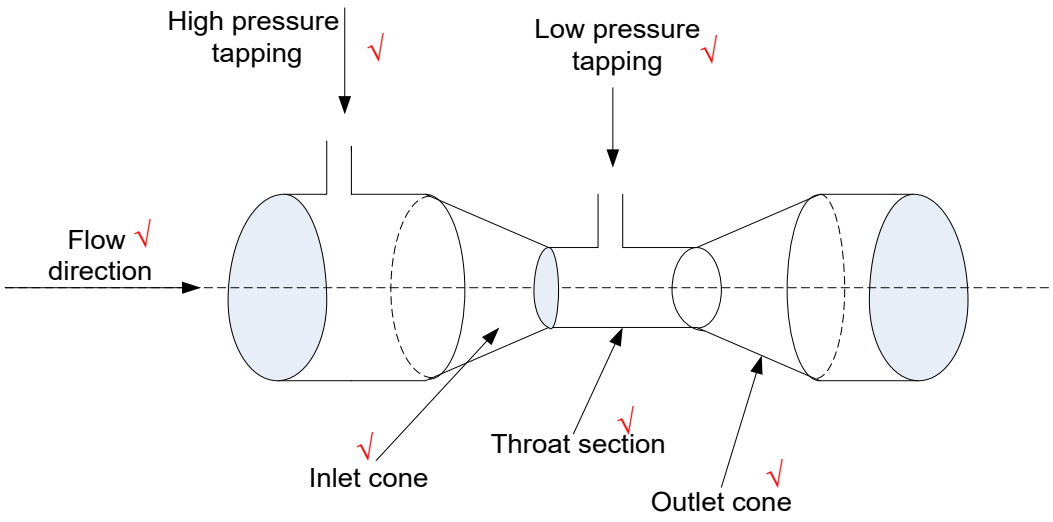

The inlet cone reduces the area of the pipe, which will increase the velocity of the flow and decrease the pressure.✓ A differential pressure is thus generated and measured.✓

(8)

6.3

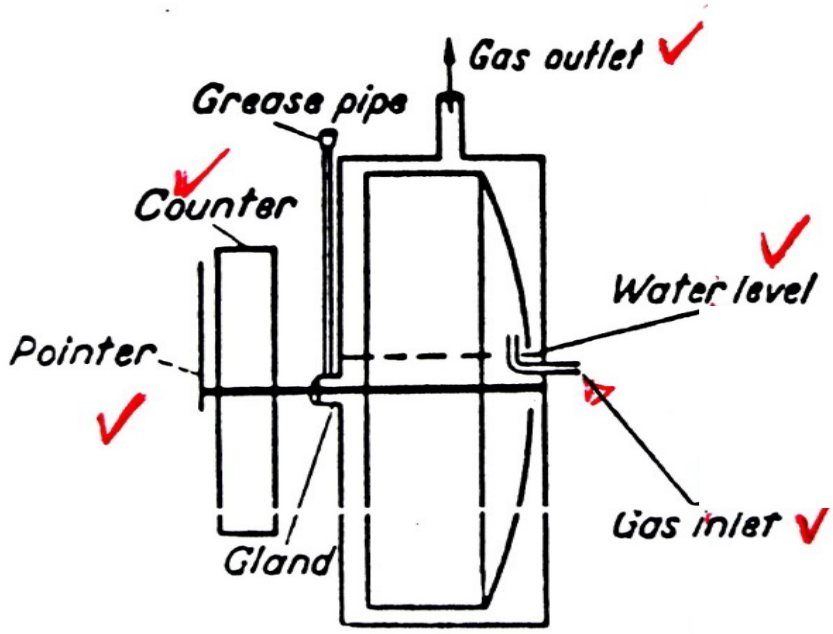

OR

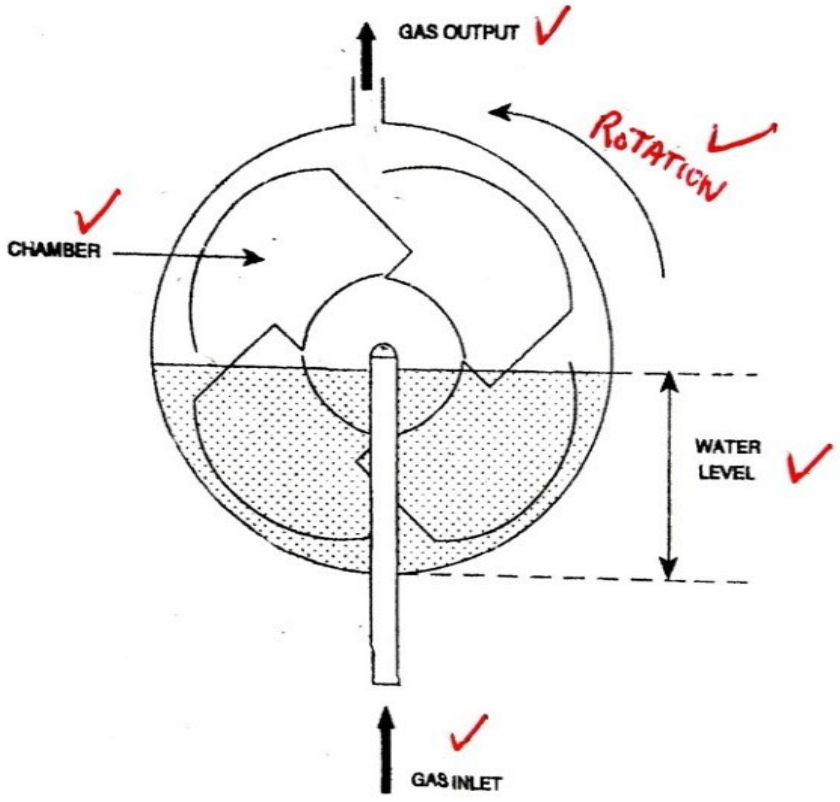

(5)

6.4
- Pressure loss is very small.
- It can be inserted into a pipe without shutting down the pipeline.
- It is very useful for determining actual velocity profiles.
- Its cost is low. (Any 3 × 1) (3)

[20]

QUESTION 7

7.1 $\Delta P = \rho g h$

$\Rightarrow h = \frac{\Delta P}{\rho g}$✓

$= \frac{54{,}3 \times 10^3}{1\,000 \times 10}$

$= 5{,}43\ m$✓✓

$\therefore V = lbh$✓
$= 5 \times 7 \times 5{,}43$
$= 190{,}05\ m^3$✓✓ (6)

7.2 $H_L = \left[\frac{\rho_m}{\rho_L}\right] \times h - H_1 - \frac{h}{2}$

$= \left[\frac{13\,600}{890}\right] \times 0{,}6 - 2 - \frac{0{,}6}{2}$

$= 89{,}385\ m$ (4)

7.3

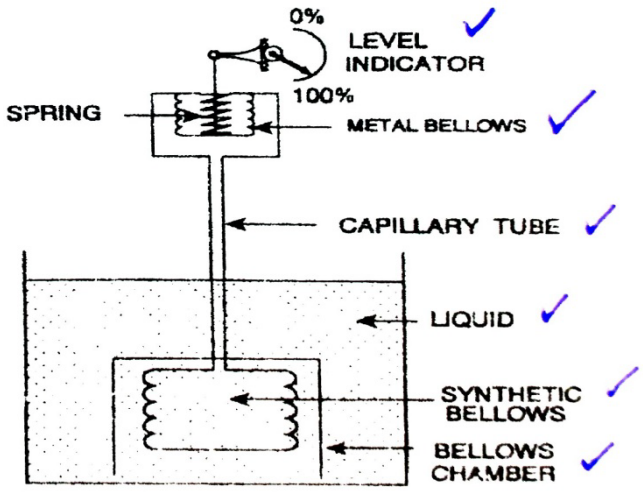

(6)

7.4 When the liquid level rises,✓ the static pressure of the liquid increases on the bellows, compressing the air inside the bellows.✓ Thus the pressure inside the bellows will increase✓ and will be passed on to an indicating instrument via the capillary tube.✓ (4)

[20]

TOTAL SECTION B: 80
GRAND TOTAL: 100

Copyright reserved