higher education & training

Department:
Higher Education and Training
REPUBLIC OF SOUTH AFRICA

MARKING GUIDELINE

NATIONAL CERTIFICATE

INSTRUMENT TRADE THEORY N2

6 APRIL 2018

This marking guideline consists of 6 pages.

Copyright reserved

SECTION A

QUESTION 1

1.1	1.1.1	C		
	1.1.2	B		
	1.1.3	C		
	1.1.4	B		
	1.1.5	A		
			(5 × 1)	(5)
1.2	1.2.1	L		
	1.2.2	E		
	1.2.3	A		
	1.2.4	K		
	1.2.5	B		
	1.2.6	C		
	1.2.7	F		
	1.2.8	J		
	1.2.9	D		
	1.2.10	G		
			(10 × 1)	(10)
1.3	1.3.1	True		
	1.3.2	True		
	1.3.3	False		
	1.3.4	True		
	1.3.5	True		
			(5 × 1)	(5)
				[20]

TOTAL SECTION A: 20

SECTION B

QUESTION 2

2.1
- Equal-leg manometer
- Unequal-leg manometer
- Inclined tube manometer
- Well- or cistern-type manometer (Any 2 × 1) (2)

2.2 $\Delta P = \rho g h \left[\frac{A_2}{A_1} + 1\right]$

$85000 = 13600 \times 10 \times h \left[\frac{25}{60} + 1\right]$

$\Rightarrow h = 0{,}441\ m$

Now $d = \frac{A_2}{A_1} \times h = \frac{25}{60} \times 0{,}441 = 0{,}184\ m$ (6)

2.3
- A diaphragm stack is the capsule,✓ which consists of multi-diaphragms joined together around their peripheries.✓
- A bellows is a diaphragm stack in which the complete element is made from a single piece of seamless thin walled tube,✓ sealed at one end.✓ (4)

2.4 $P = \frac{F}{A} = \frac{mg}{A} = \frac{Kg \times \frac{m}{s^2}}{m^2} = Kgm^{-1}s^{-2}$ and $P = \rho g h = Kgm^{-3} \times ms^{-2} \times m$

$= Kgm^{-1}s^{-2}$ (4)

2.5

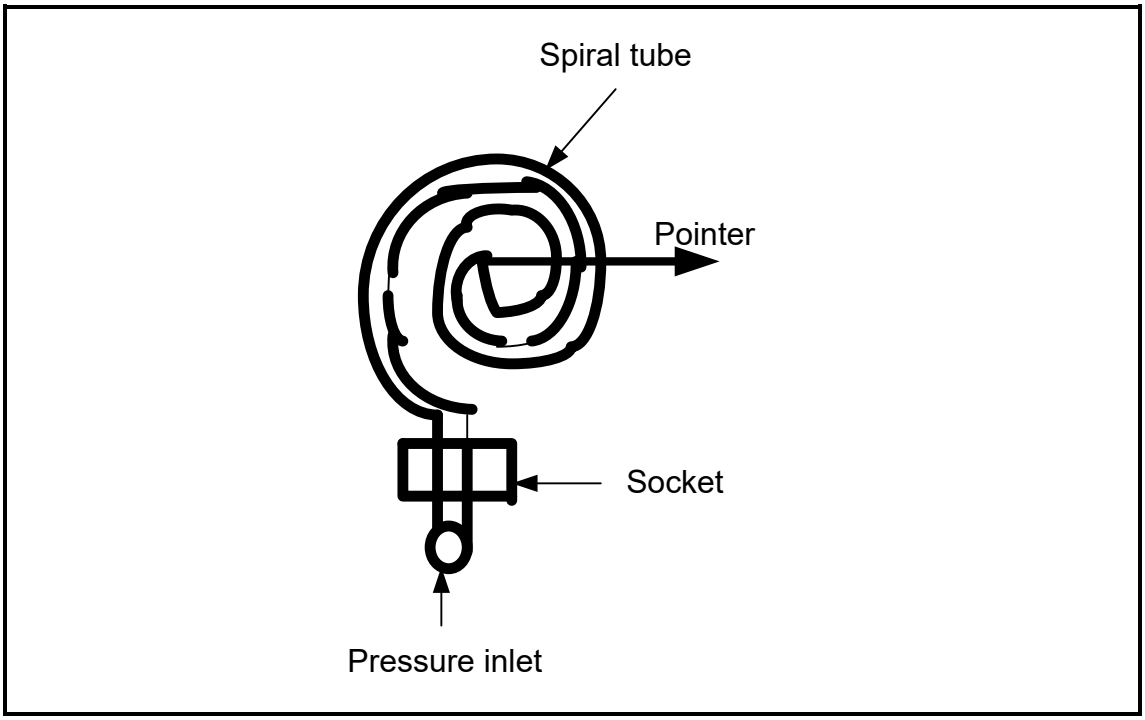

(4)
[20]

QUESTION 3

3.1 • Temperature is defined as the 'degree of heat'✓ or the measure of the average heat or thermal energy of particles in a substance.✓ (1)

3.2 3.2.1 A bimetallic strip consists of two different metals joined together.✓ The one metal has a high expansion coefficient✓ and the other has a low expansion coefficient.✓ (3)

3.2.2 A long bimetal strip is wound into a helix and one end is fixed.✓ The free end is connected to the pointer.✓ When heat is applied the strip will bend,✓ causing a rotation action around an axis.✓ (3)

3.3

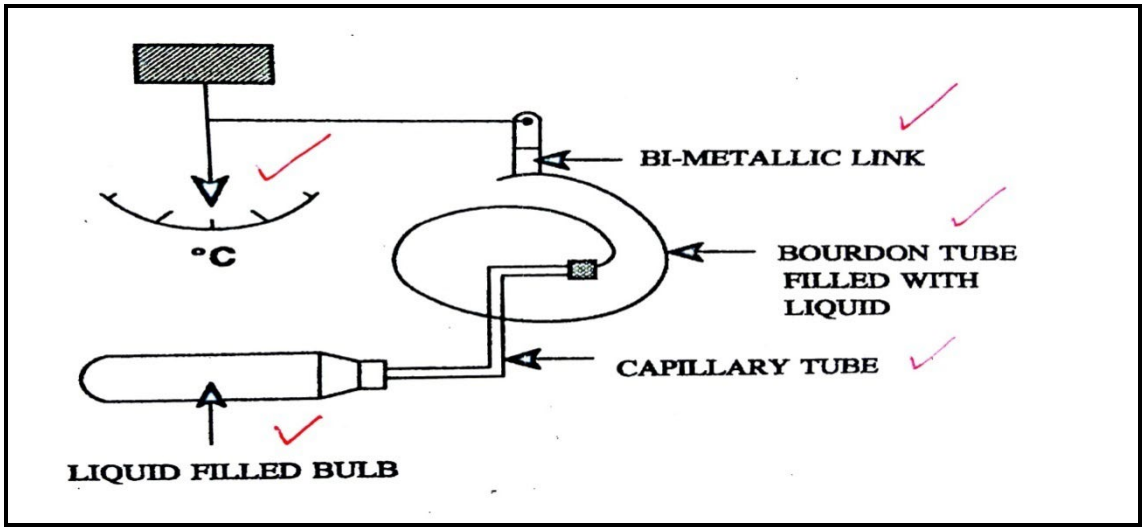

(5 × 1) (5)

3.4 3.4.1 $R_T = R_0(1+\propto T)$
$27{,}6 = 20(1 + 100 \propto)$✓
$13{,}6 - 1 = 100 \propto$✓
$\therefore \propto = 3{,}8 \times 10^{-3}/^0C$✓ (3)

3.4.2 $R_T = R_0(1+\propto T)$
$= 20(1 + 0{,}0038 \times 50)$ ✓
$= 23{,}8\ \Omega$✓ (2)

3.4.3 $R_T = R_0(1+\propto T)$
$25{,}7 = 20(1 + 0{,}0038T)$✓
$1{,}285 - 1 = 0{,}0038T$✓
$\therefore T = 75\ ^0C$✓ (3)

[20]

QUESTION 4

4.1 These measurement devices close off a known volume of liquid into compartments,✓ and allow it to pass from the inlet to the outlet.✓ The number of times compartments are filled and emptied is counted✓ and then multiplied by the volume of each compartment to obtain the total flow.✓ (4)

4.2

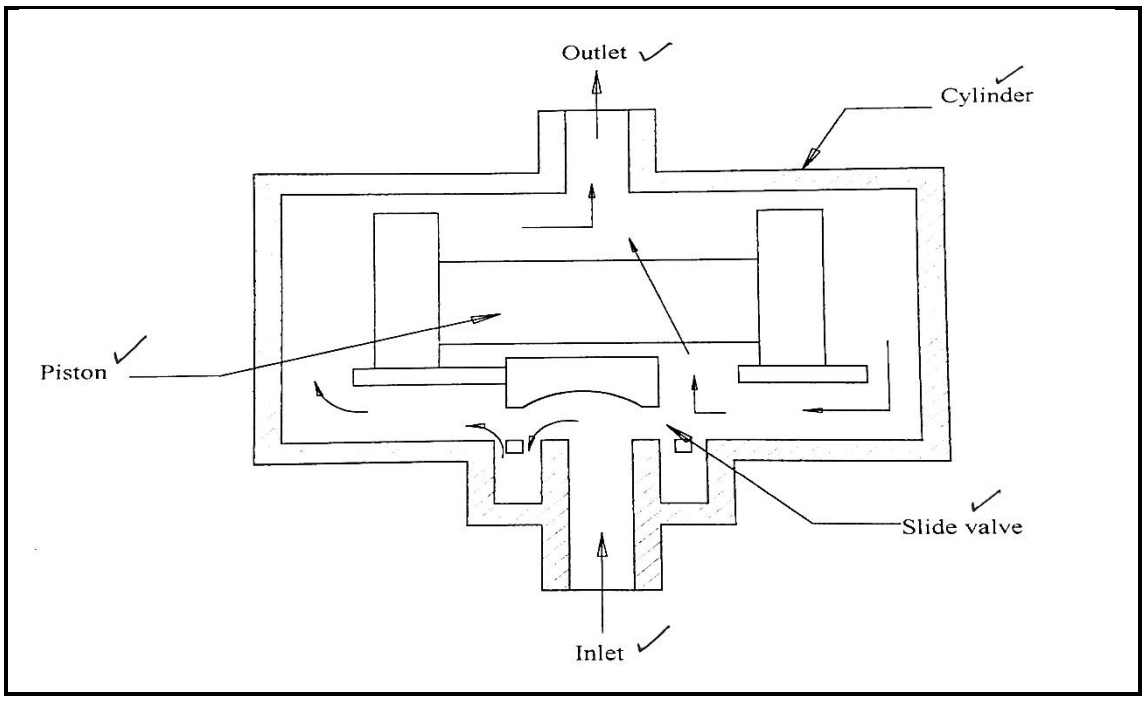

(5)

4.3
- Weight of the vane
- Force due to the liquid
- Reaction at the pivot

(3)

4.4 4.4.1

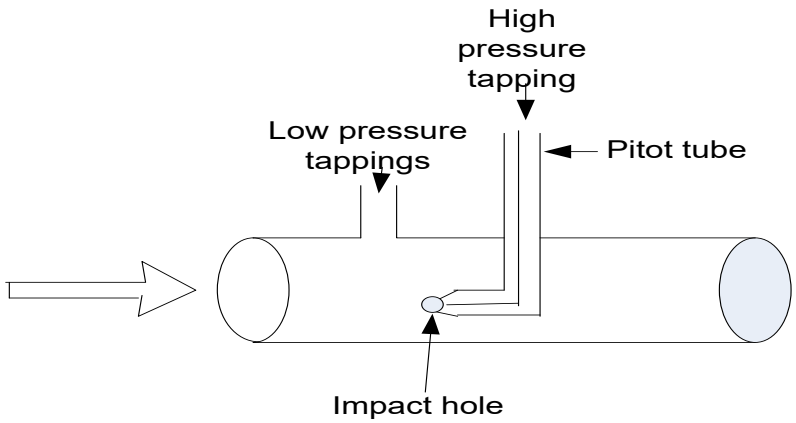

(4)

4.4.2 When the flow approaches the impact hole, the fluid particles decelerate until its velocity is zero at point of impact✓ and the pressure increases.✓ A differential pressure is measured✓ and used to infer the velocity of the fluid.✓ (4)

[20]

QUESTION 5

5.1 Pressure-operated devices are based on the fact that the depth (head) and the density of the liquid determine the pressure exerted by a column of liquid, i.e. $\Delta P = \rho gh$✓ Thus the level can be calculated as $h = \frac{\Delta P}{\rho g}$✓ (2)

5.2 5.2.1

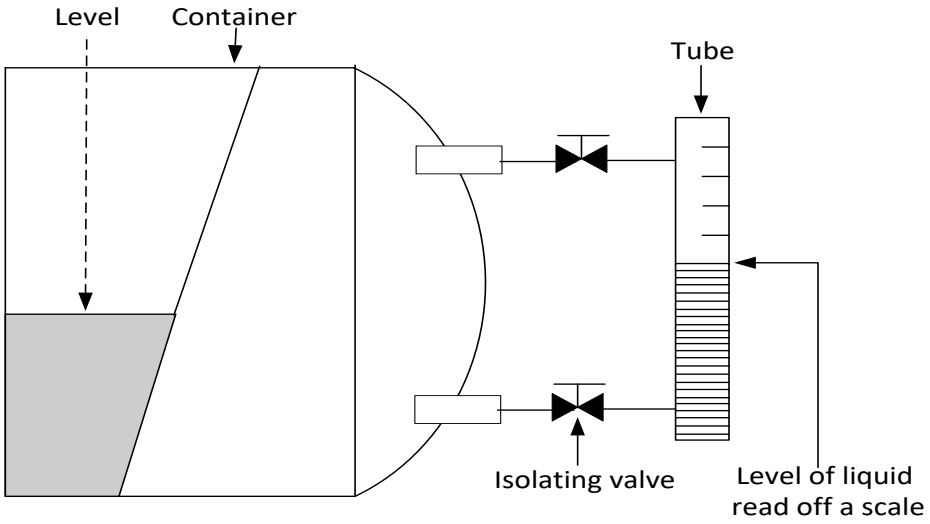

(5)

5.2.2 The valves allow for cleaning of the tube✓ and routine maintenance.✓ The valves are provided so that the steam can be shut off in case of breakage of the sight glass.✓ (3)

5.3 5.3.1

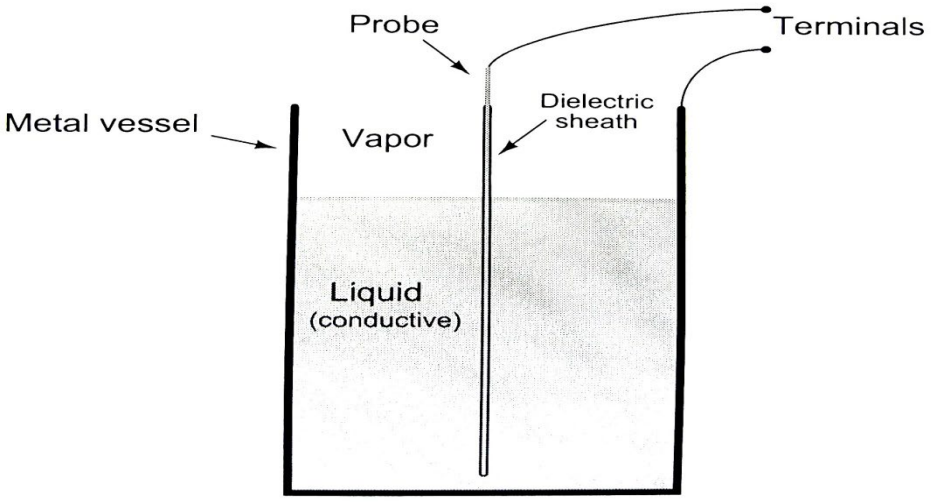

(5)

5.3.2 A capacitive level meter is suitable to determine the liquid level in a tank where the liquid serves as the dielectric.✓ As the level rises and falls✓ the dielectric between the plates changes,✓ causing the capacitance to change.✓ The change in capacitance is directly proportional to the level.✓ (5)

[20]

TOTAL SECTION B: 80
GRAND TOTAL: 100

Copyright reserved