higher education & training

Department:
Higher Education and Training
REPUBLIC OF SOUTH AFRICA

MARKING GUIDELINE

NATIONAL CERTIFICATE

AUGUST EXAMINATION

INDUSTRIAL ELECTRONICS N4

1 AUGUST 2014

This marking guideline consists of 10 pages.

Copyright reserved

QUESTION 1

Short circuit V_1

$$R_{p1A} = \frac{4 \times 8}{4 + 8} = 2{,}667\ \Omega\surd$$

$$R_{S1A} = 2{,}667 + 5$$
$$= 7{,}667\ \Omega$$

$$R_{p2A} = \frac{7{,}667 \times 15}{7{,}667 + 15} = 5{,}074\ \Omega\surd$$

$$R_{TA} = 5{,}074 + 10$$
$$= 15{,}074\ \Omega$$

$$I_{TA} = \frac{15}{15{,}074} = 0{,}995\ A\surd$$

$$I_{15\Omega A} = \frac{7{,}667}{7{,}667 + 15} \times 0{,}995$$

$$= 0{,}337\ A\surd$$

Short circuit V_2

$$R_{p1B} = \frac{10 \times 15}{10 + 15} = 6\ \Omega\surd$$

$$R_{S1B} = 6 + 5$$
$$= 11\ \Omega$$

$$R_{p2B} = \frac{11 \times 8}{11 + 8} = 4{,}632\ \Omega\surd$$

$$R_{TB} = 4{,}632 + 4$$
$$= 8{,}632\ \Omega$$

$$I_{TB} = \frac{12}{8{,}632} = 1{,}390\ A\surd$$

$$I_{RS1B} = \frac{8}{8 + 11} \times 1{,}390$$

$$= 0{,}585\ A\surd$$

$$I_{15\Omega} = \frac{10}{10 + 15} \times 0{,}585$$

$$= 0{,}234\ A\surd$$

$$I_{15\Omega T} = 0{,}337 + 0{,}234$$
$$= 0{,}571\ A\surd$$

[10]

QUESTION 2

2.1 $$f_r = \frac{1}{2\pi\sqrt{LC}}$$

$$\therefore C = \left[\frac{1^2 1}{2^2\pi^2 f_r^2}\right] L = \left[\frac{}{4\pi^2 \times [1000\,000^2}\right] 150 \times 10^{-6}\ \surd\surd\surd$$

$$= 168{,}825\text{pF}\ \surd$$

(4)

2.2 $$Z_D = \frac{L}{R1C}$$

$$= \frac{150 \times 10^{-6}}{20 \times 168^{>} 825 \times 10^{-12}}\ \surd$$

$$= 50000\ \Omega\ \surd$$

(2)

2.3 2.3 $$\text{Q faktor} = \frac{X_L}{R}$$

$$= \frac{2 \times 3{,}142 \times 1 \times 10^6 \times 150 \times 10^{-6}}{1000}\ \surd$$

$$= 0{,}943\ \surd$$

(2)

2.4 $R_T = Z_D + R$ $= 50000 + 1000$

$=5{,}9 \times 10^6 + 1000\ \surd$ $= 51000\ \Omega$

$= 5{,}9\ 01\text{M}\ \surd$

(2)

[10]

Copyright reserved

QUESTION 3

3.1

$$V'_{dc} = \frac{R_L}{R_L + R} \times V_{dc}$$

$$= \frac{6000}{6000 + 200} \times 120\surd\surd$$

$$= 116{,}129\ V\surd$$

$$V_{r'(rms)} = \frac{V_{r(rms)}}{4\pi^2 f^2 LC}$$

$$= \frac{8}{4\pi^2 \times 110^2 \times 5 \times 6 \times 10^{-6}}\surd\surd$$

$$= 0{,}558\ V\surd$$

$$r' = \frac{V_{r'(rms)}}{V'_{dc}} = \frac{0{,}558}{116{,}129}\surd$$

$$= 0{,}005\ \surd(8)$$ (8)

3.2 $V_{rms} = 0{,}707V_m$

$$V_m = \frac{220}{0{,}707} = 311{,}174\ V\surd$$

$PIV = V_m$
$= 311{,}174\ V\surd(2)$

$Vm = 1{,}414 \times Vrms$
$= 1{,}414 \times 220$
$= 311{,}1$

OR

$VM = \frac{220}{0{,}707}$
$= 311{,}174$

(2)

Copyright reserved

3.3 Advantages

- Very good smoothing action compared to other filters.√
- Better ripple reduction.√
- High output voltage.√
- Most popular. √ (Any 2 x 1) (2)

Disadvantages

- Lower output voltage due to voltage drop across the resistor.√
- Ripple increases with the load current.√
- The regulation is worse.√ (3 x 1) (3)

[15]

QUESTION 4

4.1

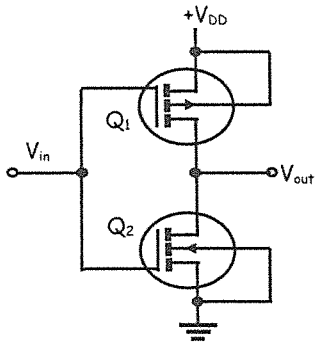

√√√√

It is widely used in battery operated applications. √ (5)

4.2 4.2.1 True√

4.2.2 True√

4.2.3 False√

4.2.4 False √

4.2.5 True √ (5)

4.3 Reducing its gain√
Reducing noise√
Reducing distortion√
Increasing its operation bandwidth√
Increasing the input impedance and decreasing the output impedance√
Improving its stability √ (Any 5 x 1) (5)

[15]

QUESTION 5

√√√

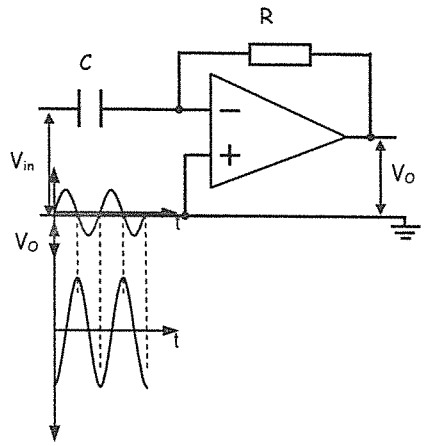

√√ (3)

(2)

5.2

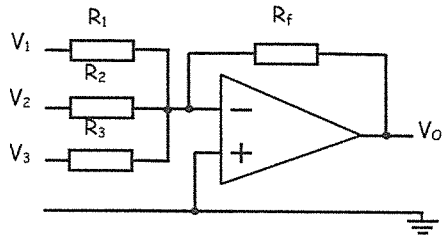

√√√

$$Vo = - R_f \left(\frac{V_1}{R_1} + \frac{V_2}{R_2} + \frac{V_3}{R_3} \right)$$

$$= - 200 \times 10^3 \left(\frac{1,5}{100 \times 10^3} + \frac{2}{150 \times 10^3} + \frac{3}{300 \times 10^3} \right)$$

= -7,677 V√√√ (6)

(6)

5.3 5.3.1 B √√ (2)

5.3.2 D√√ (2)
[15]

QUESTION 6

6.1

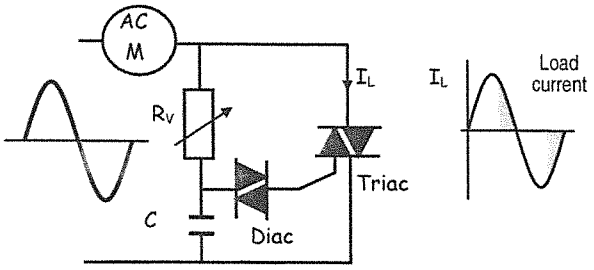

√√√√√ (5)

The triac conducts in either direction when turned on.√
Positive or negative gate signal triggers it into conduction, therefore controlling the AC motor.√
The conduction angle can be controlled by varying the resistor.√

6.2 6.2.1

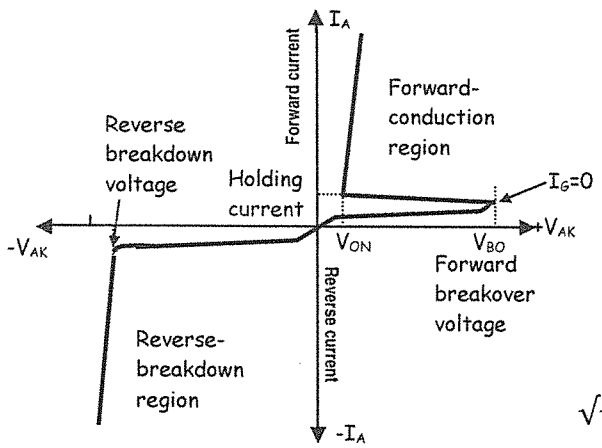

√√√ (3)

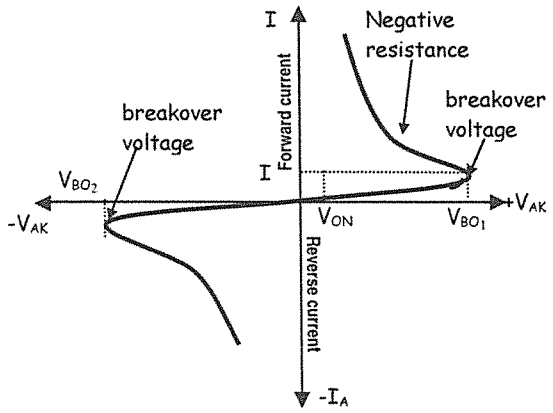

√√√

6.2.2 (3)

6.3 It will remain on even when the gate is removed in the DC circuit. √ (1)
[15]

QUESTION 7

7.

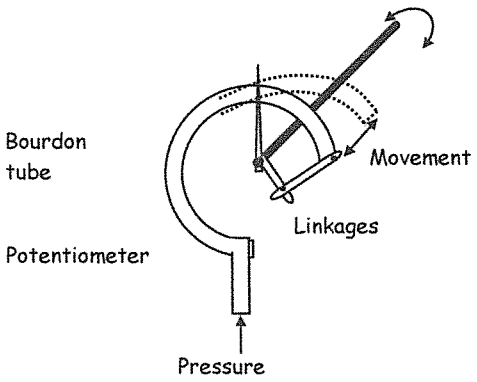

√√

(2)

When pressure is applied to the bourdon tube, the resulting force will straighten the tube.
The shaft will then turn and the resistance of the tube changes.
The change in resistance is calibrated to read angular displacement.√√√
When pressure is reduced, the bourdon tube returns to its original position. (3)

7.2 Distance between the plates √

Area of the each plate √

Di-electric constant √ (3)

7.3 The function of the compensating gauge prevents false observation due to temperature variation.√√ (2)
[10]

QUESTION 8

8.2 t =sec/cm x no. of div

$=100 \times 10^{-6} \times 4$ (2)

$= 400\ \mu s\surd\surd$

$$f = \frac{1}{t} = \frac{1}{400 \times 10^{-6}}$$

$= 2500\ Hz\ \surd\surd$ (2)

8.2

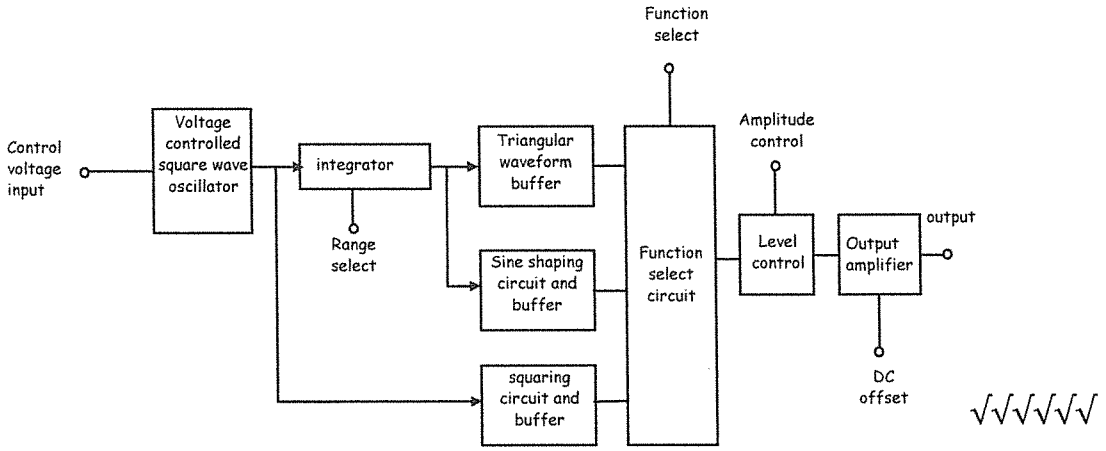

√√√√√√

(6)
[10]

TOTAL: 100

Copyright reserved