higher education & training

Department:
Higher Education and Training
REPUBLIC OF SOUTH AFRICA

NATIONAL CERTIFICATE

INDUSTRIAL ELECTRONICS N4

(8080164)

7 April 2021 (X-paper)
09:00–12:00

This question paper consists of 5 pages.

064Q1A2107

Copyright reserved

DEPARTMENT OF HIGHER EDUCATION AND TRAINING
REPUBLIC OF SOUTH AFRICA

NATIONAL CERTIFICATE
INDUSTRIAL ELECTRONICS N4
TIME: 3 HOURS
MARKS: 100

INSTRUCTIONS AND INFORMATION

1. Answer all the questions.
2. Read all the questions carefully.
3. Number the answers according to the numbering system used in this question paper.
4. Write neatly and legibly.

Copyright reserved

QUESTION 1

1.1 Study the circuit diagram above and calculate the current flowing across the 23-Ω resistor, using the superposition theorem. (7)

1.2 Explain Kirchhoff's current law. (2)

1.3 List the first and the second step to be followed when calculating the current flowing across the 23-Ω resistor in QUESTION 1.1 using Thévenin's theorem. (2)

[11]

QUESTION 2

2.1 Explain the term *bandwidth.* (2)

2.2 Study the circuit diagram below and calculate the value of the unknown series resistor and capacitor using j-notation.

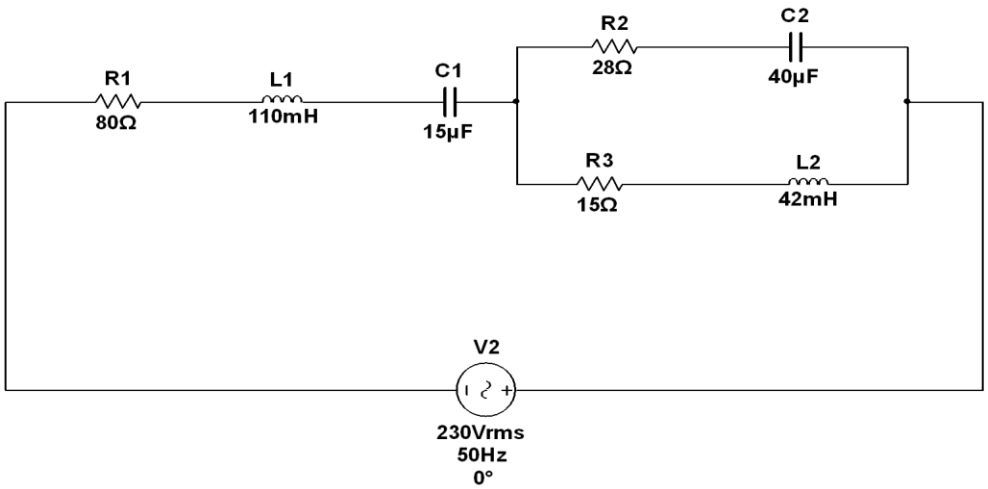

(9)

[11]

QUESTION 3

3.1 Explain reverse saturation current of a diode. (3)

3.2 Indicate whether the following statements are TRUE or FALSE by writing only 'True' or 'False' next to the question number (3.2.1–3.2.6) in the ANSWER BOOK.

3.2.1 The process of generating free electrons is called a covalent bond.

3.2.2 Acceptor doping is the process of generating holes.

3.2.3 Reverse bias occurs when the external voltage source is connected in such a way that its positive terminal is connected to the N-type.

Copyright reserved

3.2.4 For large reverse current, a normal PN junction diode is used instead of a Zener diode.

3.2.5 A Zener diode can be used as voltage regulator.

3.2.6 A negative resistance region of a tunnel diode is a decrease in terminal voltage resulting in an increase in diode current.

(6 × 1) (6)

3.3 Calculate the forward current of a diode if it has a formal resistance of 308 mΩ at a room temperature of 33 °C. (2)

[11]

QUESTION 4

4.1 Name and explain three basic components of a DC power supply. (6)

4.2 A centre-tap full wave rectifier has a voltage $V_{ac} = 220$ V and $R_L = 210$ Ω. Calculate the following:

4.2.1 V_{dc}

4.2.2 V_{rms}

4.2.3 The ripple factor

4.2.4 The maximum current

4.2.5 The average diode current

4.2.6 PIV

(6 × 1) (6)

[12]

QUESTION 5

5.1 Explain the following operations of a transistor:

5.1.1 Static operation

5.1.2 Dynamic operation

(2 × 2) (4)

5.2 An amplifier has the following information: output current = 10 A, output impedance = 35 Ω and input power = 1,7 KW.

Calculate power gain in db. (4)

5.3 Explain cross-over distortion when transistors are used as amplifiers. (2)

5.4 Which transistor possesses a negative resistance characteristic? (1)

[11]

Copyright reserved

QUESTION 6

6.1 Give THREE advantages of an op-amplifier. (3)

6.2 Draw a labelled circuit diagram of a summing amplifier. (4)

6.3 The circuit diagram drawn in QUESTION 6.2 above has the following data: R_1 = 3 KΩ, R_2 = 1,5 KΩ, R_3 = 15 KΩ, R_f = 15 KΩ, and the input voltages are V_1 = 7,5 V, V_2 = 12,5 V, V_3 = 10 V.

Calculate the output voltage. (4)
[11]

QUESTION 7

7.1 How does a DIAC switch off? (2)

7.2 Explain the following components of an open-loop system:

7.2.1 Reference input

7.2.2 Trigger circuit and SCR

7.2.3 Load

7.3.4 Display unit

(4 × 1) (4)

7.3 Draw a block diagram of a closed-loop system. (5)
[11]

QUESTION 8

8.1 What is the common function of a potentiometer? (2)

8.2 Explain the operating principle of angular displacement with pressure. (5)

8.3 Draw a labelled circuit diagram of a linear variable differential transformer. (5)
[12]

QUESTION 9

9.1 A cathode ray tube (CRT) is divided into FIVE sections.

List all FIVE sections of a CRT. (5)

9.2 List THREE things that the converging path of the beam of electromagnetic focusing. (3)

9.3 Name TWO types of deflection systems. (2)
[10]

TOTAL: 100

Copyright reserved