higher education & training

Department:
Higher Education and Training
REPUBLIC OF SOUTH AFRICA

NATIONAL CERTIFICATE

INDUSTRIAL ELECTRONICS N4

(8080164)

7 April 2020 (X-paper)
09:00–12:00

This question paper consists of 7 pages and a formula sheet of 2 pages.

132Q1A2007

Copyright reserved

DEPARTMENT OF HIGHER EDUCATION AND TRAINING
REPUBLIC OF SOUTH AFRICA

NATIONAL CERTIFICATE
INDUSTRIAL ELECTRONICS N4
TIME: 3 HOURS
MARKS: 100

INSTRUCTIONS AND INFORMATION

1. Answer all the questions.
2. Read all the questions carefully.
3. Number the answers according to the numbering system used in this question paper.
4. Start each question on a new page.
5. Write neatly and legibly.

Copyright reserved

QUESTION 1

1.1 Explain the following theorems:

1.1.1 Superposition theorem

1.1.2 Thevenin's theorem

(2 × 2) (4)

1.2 Use Kirchhoff's method to determine the current flowing through 5 Ω in FIGURE 1.

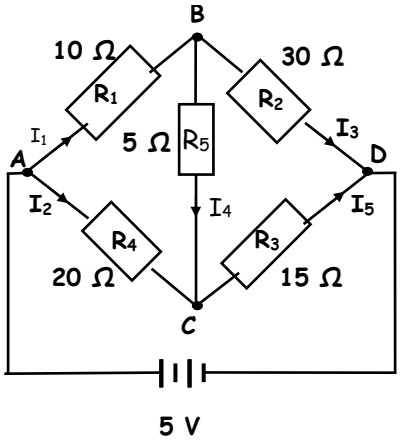

FIGURE 1

(10)
[14]

QUESTION 2

2.1 A parallel LC circuit tuned to 320 kHz with a 235,5 Ω inductor, has measured Z of 1 228 Ω.

Calculate Q of this LC circuit. (2)

2.2 Consider FIGURE 2 and use complex numbers to calculate the following:

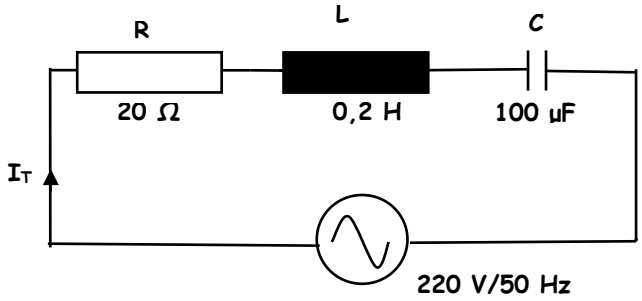

FIGURE 2

2.2.1 The total impedance of the circuit (2)

2.2.2 The current flowing in the circuit (2)

2.2.3 The voltage drop across the inductor (2)

2.2.4 The voltage drop across the capacitor (2)
[10]

QUESTION 3

3.1 Explain the following terms:

3.1.1 Donor doping

3.1.2 Acceptor atoms

3.1.3 Diffusion

(3 × 2) (6)

3.2 Draw a labelled characteristic curve of a tunnel diode. (6)
[12]

QUESTION 4

4.1 Explain the following components of a DC power supply:

4.1.1 Turns ratio

4.1.2 Rectification

4.1.3 Peak reverse voltage

4.1.4 Ripple factor

(4 × 2) (8)

4.2 A centre tap full-wave rectifier circuit has V_{ac} = 240 V and R_L = 150 Ω.

Calculate V_{dc} and PIV. (4)
[12]

QUESTION 5

5.1 Study the diagram of the input characteristic and explain the behaviour of V_{CE} and V_{BE}.

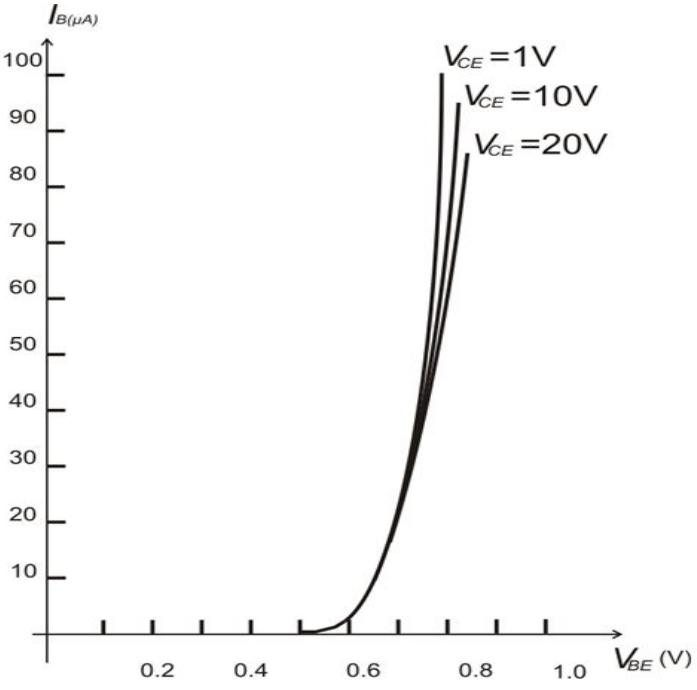

(4)

5.2 The following data was given for an amplifier:

Input voltage = 30 V, output impedance = 80 Ω, output power = 200 W, input power = 15 W

5.2.1 Calculate the voltage gain in dB. (3)

5.2.2 Calculate the current gain in dB. (3)

5.3 Explain negative feedback amplifiers. (2)

[12]

QUESTION 6

6.1 Calculate the voltage output and gain of no-inverting amplifiers if Vin = 5 V, R_1 = 25 kΩ and R_f = 30 Ω. (3)

6.2 A summing amplifier has the following information:

R_1 = 10 kΩ, R_2 = 12 kΩ, R_3 = 17,5 kΩ, R_f = 22 KΩ, V_1 = 5,5 V, V_2 = 2,5 V, V_3 = 1 V.

Calculate the output voltage V_o, (4)

6.3 Calculate the input voltage (V_{in}) if the integrating amplifier has a rate of change of 0,9 V/sec, C = 100 µF and R_{in} = 25 kΩ. (3)

[10]

Copyright reserved

QUESTION 7

7.1 Explain the following terms of an SCR:

7.1.1 Forward blocking

7.1.2 Holding current

(2 × 2) (4)

7.2 Draw an SCR characteristic curve. (5)

7.3 Explain the role of the comparator of a closed-loop system. (1)
[10]

QUESTION 8

8.1 Study the circuit diagram and explain the operating principle.

Quarter-bridge strain gauge circuit

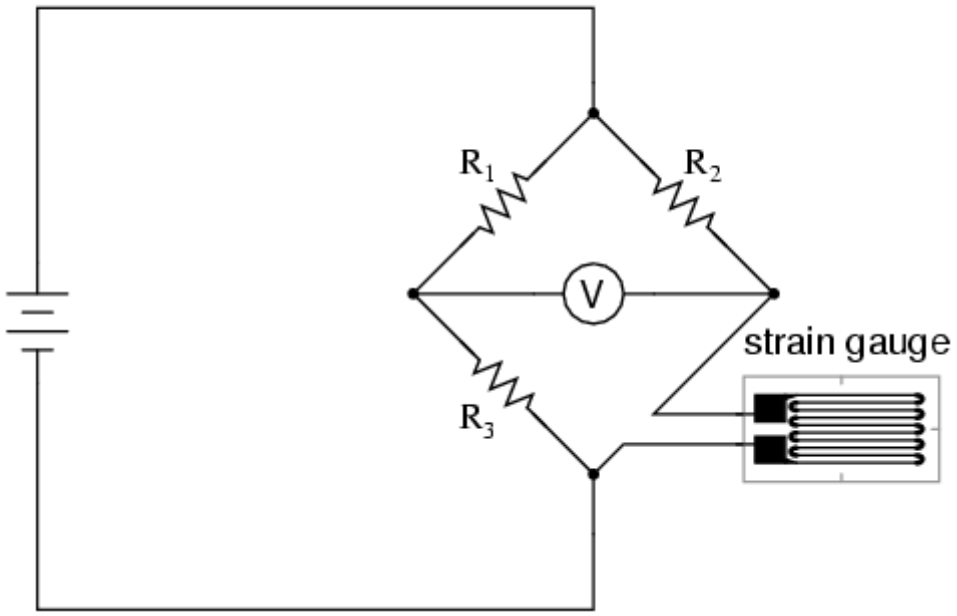

(5)

8.2 Explain the following conditions of the strain gauge used on a Wheatstone bridge:

8.2.1 Pressure is applied in the active gauge

8.2.2 No pressure is applied in the active gauge

(2 × 1) (2)

8.3 What makes a current to flow through a light-dependent resistor? (2)
[9]

QUESTION 9

9.1 Name TWO types of CRT deflection systems. (2)

9.2 Explain the following components of an oscilloscope block diagram:

9.2.1 Trigger circuit

9.2.2 Delay line

(2 × 2) (4)

9.3 An oscilloscope displays amplifier gain with a setting of 0,4 V/div and the time-base setting is 2 µsec/div. From the 0 V reference line to the peak, 2,7 cm is measured.

Calculate the following:

9.3.1 Peak-to-peak voltage (2)

9.3.2 The period and frequency (3)

[11]

TOTAL: 100

Copyright reserved

INDUSTRIAL ELECTRONICS N4

FORMULA SHEET

Any other applicable formula may be used.

$$\frac{1}{R_T} = \left(\frac{1}{R_1} + \frac{1}{R_2} + \ldots \frac{1}{R_n}\right) \qquad R_T = \frac{R_1 R_2}{R_1 + R_2} \qquad V_2 = \frac{R_2}{R_1 + R_2} \times \frac{V_T}{1}$$

$$Z = \sqrt{R^2 + (X_L - X_c)^2} \quad Cos\ \theta° = \frac{R}{Z} \quad P = I^2 R \quad P = \frac{V^2}{R} \quad P = VI\text{Cos}\theta$$

$$P = V\ .\ I \qquad F_r = \frac{1}{2\pi\sqrt{LC}} \qquad Q = \frac{X_L}{R} \qquad OF \quad \frac{1}{R}\sqrt{\frac{L}{C}}$$

$$I_t = \sqrt{I_R^2 + (I_c - I_L)^2} \qquad Z = \frac{1}{\sqrt{\left(\frac{1}{R}\right)^2 + \left(\frac{1}{X_c} - \frac{1}{X_L}\right)^2}} \qquad \frac{N_1}{N_2} = \frac{V_1}{V_2} = \frac{I_2}{I_1}$$

$$V_{rms} = 0{,}707\ V_m \qquad i = I_s\left(e^{\frac{gv}{kT}} - 1\right) \qquad R = \frac{kT}{qi} \qquad V.R = \frac{V_{NL} - V_{FL}}{V_{FL}}$$

$$V_{ave} = 0{,}637\ V_m$$

$$f = \frac{1}{t} \qquad Rate\ of\ change = -\frac{V_{in}}{CR_{in}}$$

$$V_{dc} = 0{,}318\ V_m \qquad V_{dc} = 0{,}637\ V_m$$

$$\text{V}_{\text{r}_{\text{rms}}} = 0{,}385\ \text{V}_\text{m}$$

$$PIV = V_m \quad \text{or} \quad 2\ V_m$$

$$V_{r_{rms}} = \frac{V_r\ (p - p)}{2\sqrt{3}} \qquad V_{dc} = V_m - \frac{V_r\ (p - p)}{2}$$

$$r = \frac{V_{r_{rms}}}{V_{dc}} \qquad V_{r_{rms}} = \frac{V_{dc}}{R_L\ 2\sqrt{3}\ FC}$$

$$V_{dc} = V_m \quad \frac{I_{dc}}{2FC} \qquad r = \frac{I_{dc}}{V_{dc}\ 2\sqrt{3}\ FC}$$

$$V_{r'_{rms}} = \frac{X_c}{\sqrt{R^2 + X_c^2}} \times \frac{V_{r_{rms}}}{1}$$

$$V'_{dc} = \frac{R_L}{R_L + R_S} \times \frac{V_{dc}}{1} \qquad V_{r'_{rms}} = \frac{V_{r_{rms}}}{(2\pi f)^2\ LC}$$

Copyright reserved

$$R_{in} = \frac{V_{be}}{I_b} \qquad R_{out} = \frac{V_{ce}}{I_c} \qquad R_c = \frac{V_{cc}}{I_c} \qquad V_{out} = R_1 C \frac{dv_i}{dt}$$

$$\textit{Static current gain} = \frac{I_{out}}{I_{in}}$$

$$\textit{Dynamic current gain} = \frac{\Delta I_{out}}{\Delta I_{in}}$$

$$V_{cc} = V_{RC} + V_{ce} \qquad V_{ce} = V_{cc} - V_{RC} \qquad R = \frac{p\ell}{a}$$

$$A_p = 10 \log \frac{P_{out}}{P_{in}} \qquad A_v = 20 \log \frac{V_{out}}{V_{in}} \qquad A_i = 20 \log \frac{I_{out}}{I_{in}}$$

$$\textit{Static voltage gain} = \frac{V_{out}}{V_{in}}$$

$$\textit{Dynamic voltage gain} = \frac{\Delta V_{out}}{\Delta V_{in}}$$

$$hie = \frac{\Delta V_{in}}{\Delta I_{in}} = \frac{\Delta V_{be}}{\Delta I_b} \qquad V_{ce} = \textit{constant}$$

$$hre = \frac{\Delta V_{in}}{\Delta V_{out}} = \frac{\Delta V_{be}}{\Delta V_{ce}} \qquad I_b = \textit{constant}$$

$$hfe = \frac{\Delta I_{out}}{\Delta I_{in}} = \frac{\Delta I_c}{\Delta I_b} \qquad V_{ce} = \textit{constant}$$

$$hoe = \frac{\Delta I_{out}}{\Delta V_{out}} = \frac{\Delta I_c}{\Delta V_{ce}} \qquad I_b = \textit{constant}$$

$$V_{out} = \frac{R_f}{R_{in}} \times V_{in} \qquad V_{out} = -\left(\frac{R_f V_1}{R_1} + \frac{R_f V_2}{R_2} + \ldots \frac{V_n R_f}{R_n} \right)$$

$$V_{out} = \left(1 + \frac{R_f}{R_{in}} \right) \quad V_{in} \qquad V_{out} = -\frac{1}{CR_{in}} \int V_{in}\ (t)\ dt$$

Boltzmann's constant = 1,38 × 10^{-23} J/k

Electron charge = 1,6 × 10^{-19} C

Copyright reserved