higher education & training

Department:
Higher Education and Training
REPUBLIC OF SOUTH AFRICA

T780**(E)**(M26)T

NATIONAL CERTIFICATE

INDUSTRIAL ELECTRONICS N4

(8080164)

26 March 2018 (X-Paper)
09:00–12:00

This question paper consists of 7 pages and a formula sheet of 2 pages.

Copyright reserved

DEPARTMENT OF HIGHER EDUCATION AND TRAINING
REPUBLIC OF SOUTH AFRICA

NATIONAL CERTIFICATE
INDUSTRIAL ELECTRONICS N4
TIME: 3 HOURS
MARKS: 100

INSTRUCTIONS AND INFORMATION

1. Answer ALL the questions.
2. Read ALL the questions carefully.
3. Number the answers according to the numbering system used in this question paper.
4. Write neatly and legibly.

Copyright reserved

QUESTION 1

1.1 State FOUR steps that must be applied when using the superposition theorem. (4)

1.2 Calculate the current flowing through the 15 Ω resistor in the circuit diagram below using the steps in QUESTION 1.1.

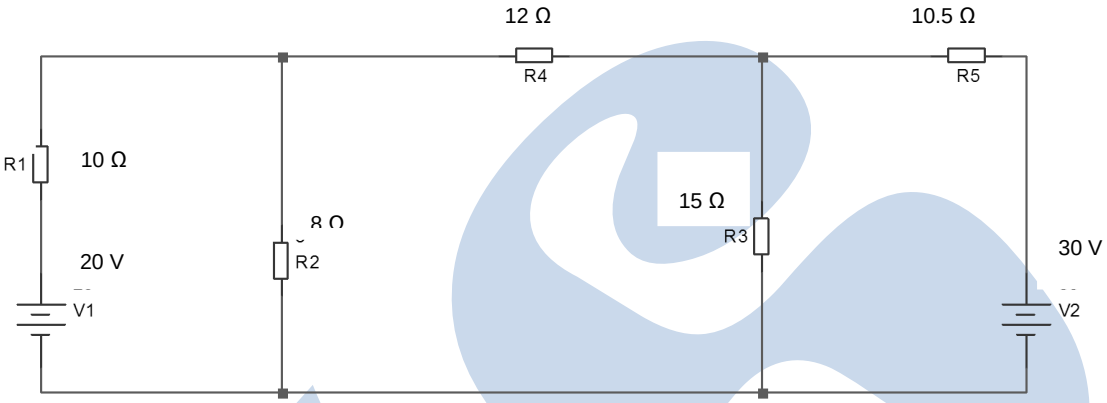

(8)
[12]

QUESTION 2

2.1 Study the circuit diagram below and answer the questions.

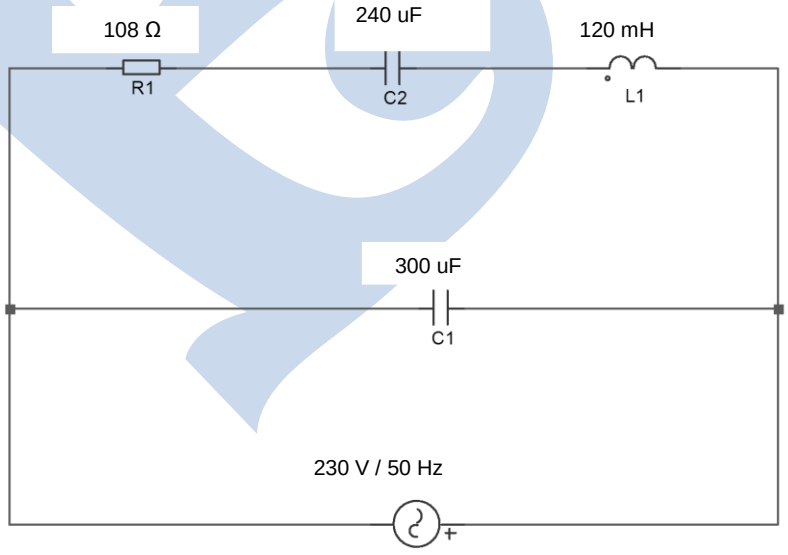

Calculate the following, using j-notation:

2.1.1 Total impedance (6)

2.1.2 Total current (2)

Copyright reserved

2.2 Explain each of the following terms:

2.2.1 Dynamic impedance

2.2.2 Quality factor of a resonant circuit

(2 × 2) (4)
[12]

QUESTION 3

3.1 Choose a term from COLUMN B that matches a description in COLUMN A. Write only the letter (A–F) next to the question number (3.1.1–3.1.5) in the ANSWER BOOK.

COLUMN A		COLUMN B	
3.1.1	Formed by four of the five valence electrons of phosphorus	A	tunnel diode
		B	silicon diode
3.1.2	Penetration of electrons from a dense medium to a less dense medium	C	diffusion
		D	covalent bonds
3.1.3	Diode used for large reverse currents instead of normal pn-junctions	E	Zener diode
		F	varactor diode
3.1.4	Diode commonly used in turning circuits		
3.1.5	Diode used in high-speed applications such as components		

(5 × 1) (5)

3.2 A reverse saturation current of a germanium diode is 15 nA at a temperature of 30 °C.

Calculate the voltage across the junction when a forward current of 5 µA flows through the diode. (5)
[10]

QUESTION 4

4.1 Explain each of the following terms:

4.1.1 Ripple voltage

4.1.2 Ripple factor

(2 × 2) (4)

Copyright reserved

4.2 A half-wave rectifier is filtered by an RC filter stage with a resistance of 200 Ω and a capacitor of 120 µF. The first capacitor filter develops a 24 V dc with a 4 Vrms ripple voltage when the supply frequency is 60 Hz.

Calculate the output ripple voltage. (4)

4.3 Give THREE disadvantages of using a choke-input filter. (3)
[11]

QUESTION 5

5.1 The data below was collected from an amplifier.

- Input voltage = 6 V
- Input current = 25 A
- Output power = 40 W
- Output voltage = 75 V

Calculate the voltage gain, current gain and power gain of the amplifier. (5)

5.2 Name FIVE characteristics of a field-effect transistor. (5)

5.3 When are unijunction transistors commonly used in practice? (1)
[11]

QUESTION 6

6.1 An inverting and non-inverting operational amplifier has an input voltage (V_{in}) of 0,8 V; an input resistor (R_{in}) of 2 KΩ, and an R_f of 10 KΩ.

Calculate each of the following:

6.1.1 Voltage gain on inverting

6.1.2 Voltage gain on non-inverting

(2 × 3) (6)

6.2 Draw the circuit diagram of each of the following:

6.2.1 Integrator

6.2.2 Differentiator

(2 × 3) (6)
[12]

Copyright reserved

QUESTION 7

7.1 State THREE disadvantages of an SCR. (3)

7.2 Explain how an SCR is switched from the on-state to the off-state. (2)

7.3 State TWO practical applications of an LASCR. (2)

7.4 A learner who was asked to draw a characteristic curve of an SCR decided to draw an LASCR.

Is the learner correct? Give a reason for the answer. (1 + 1) (2)

7.5 A block diagram of an open-loop system consists of a reference input, a trigger circuit, an SCR and a load-and-display unit.

What is the function of each of the following components?

7.5.1 Reference input

7.5.2 Trigger circuit

(2 × 1) (2)
[11]

QUESTION 8

8.1 List FOUR requirements that a transducer must meet to ensure its reliable operation. (4)

8.2 Explain each of the following with regard to inductive transducers:

8.2.1 Linear variable differential transformer

8.2.2 Tachogenerator

(2 × 2) (4)

8.3 List THREE types of photosensitive transducers. (3)
[11]

Copyright reserved

QUESTION 9

9.1 Name TWO types of cathode-ray tube deflection systems. (2)

9.2 Study the picture of the front of an oscilloscope.

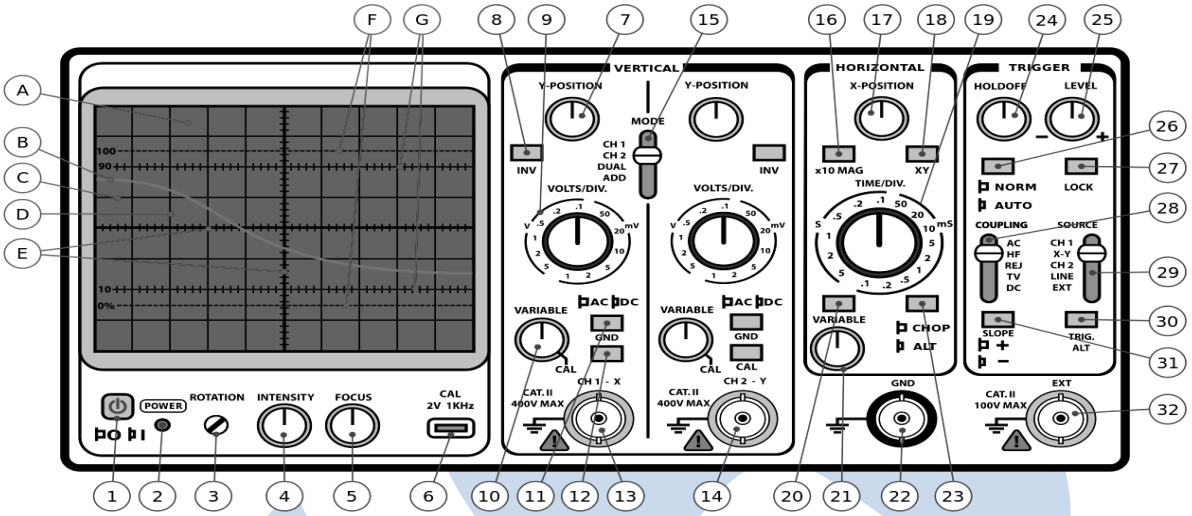

Explain the function of each of the following switches:

9.2.1 AC/GND/DC

9.2.2 Time/Div

9.2.3 Trigger level control

(3 × 2) (6)

9.3 A sine wave of an oscilloscope has a V_{ave} of 0,736 V.

Calculate the peak voltage and rms value. (2)

[10]

TOTAL: 100

Copyright reserved

INDUSTRIAL ELECTRONICS N4

FORMULA SHEET

Any other applicable formula may be used.

$$\frac{1}{R_T}=\left(\frac{1}{R_1}+\frac{1}{R_2}+\ldots\frac{1}{R_n}\right) \qquad R_T=\frac{R_1R_2}{R_1+R_2} \qquad V_2=\frac{R_2}{R_1+R_2}\times\frac{V_T}{1}$$

$$Z=\sqrt{R^2+(X_L-X_c)^2} \qquad Cos\,\theta°=\frac{R}{Z} \qquad P=I^2R \qquad P=\frac{V^2}{R} \qquad P=VICos\theta$$

$$P=V\,.\,I \qquad F_r=\frac{1}{2\pi\sqrt{LC}} \qquad Q=\frac{X_L}{R} \qquad OF\ \frac{1}{R}\sqrt{\frac{L}{C}}$$

$$I_t=\sqrt{I_R^2+(I_c-I_L)^2} \qquad Z=\frac{1}{\sqrt{\left(\frac{1}{R}\right)^2+\left(\frac{1}{X_c}-\frac{1}{X_L}\right)^2}} \qquad \frac{N_1}{N_2}=\frac{V_1}{V_2}=\frac{I_2}{I_1}$$

$$V_{rms}=0{,}707\,V_m \qquad i=I_s\left(e^{\frac{gv}{kT}}-1\right) \qquad R=\frac{kT}{qi} \qquad V.R=\frac{V_{NL}-V_{FL}}{V_{FL}}$$

$$V_{ave}=0{,}637\,V_m$$

$$f=\frac{1}{t} \qquad Rate\ of\ change=-\frac{V_{in}}{CR_{in}}$$

$$V_{dc}=0{,}318\,V_m \qquad V_{dc}=0{,}637\,V_m$$

$$V_{r_{rms}}=0{,}385\,V_m$$

$$PIV=V_m \quad \text{or} \quad 2\,V_m$$

$$V_{r_{rms}}=\frac{V_r\ (p-p)}{2\sqrt{3}} \qquad V_{dc}=V_m-\frac{V_r\ (p-p)}{2}$$

$$r=\frac{V_{r_{rms}}}{V_{dc}} \qquad V_{r_{rms}}=\frac{V_{dc}}{R_L\ 2\sqrt{3}\ FC}$$

$$V_{dc}=V_m\quad\frac{I_{dc}}{2FC} \qquad r=\frac{I_{dc}}{V_{dc}\ 2\sqrt{3}\ FC}$$

$$V_{r'_{rms}}=\frac{X_c}{\sqrt{R^2+X_c^2}}\times\frac{V_{r_{rms}}}{1}$$

$$V'_{dc}=\frac{R_L}{R_L+R_S}\times\frac{V_{dc}}{1} \qquad V_{r'_{rms}}=\frac{V_{r_{rms}}}{(2\pi f)^2\ LC}$$

Copyright reserved

$$R_{in} = \frac{V_{be}}{I_b} \qquad R_{out} = \frac{V_{ce}}{I_c} \qquad R_c = \frac{V_{cc}}{I_c} \qquad V_{out} = R_1 C \frac{dv_i}{dt}$$

$$\textit{Static current gain} = \frac{I_{out}}{I_{in}}$$

$$\textit{Dynamic current gain} = \frac{\Delta I_{out}}{\Delta I_{in}}$$

$$V_{cc} = V_{RC} + V_{ce} \qquad V_{ce} = V_{cc} - V_{RC} \qquad R = \frac{p\ell}{a}$$

$$A_p = 10 \log \frac{P_{out}}{P_{in}} \qquad A_v = 20 \log \frac{V_{out}}{V_{in}} \qquad A_i = 20 \log \frac{I_{out}}{I_{in}}$$

$$\textit{Static voltage gain} = \frac{V_{out}}{V_{in}}$$

$$\textit{Dynamic voltage gain} = \frac{\Delta V_{out}}{\Delta V_{in}}$$

$$hie = \frac{\Delta V_{in}}{\Delta I_{in}} = \frac{\Delta V_{be}}{\Delta I_b} \qquad V_{ce} = \textit{constant}$$

$$hre = \frac{\Delta V_{in}}{\Delta V_{out}} = \frac{\Delta V_{be}}{\Delta V_{ce}} \qquad I_b = \textit{constant}$$

$$hfe = \frac{\Delta I_{out}}{\Delta I_{in}} = \frac{\Delta I_c}{\Delta I_b} \qquad V_{ce} = \textit{constant}$$

$$hoe = \frac{\Delta I_{out}}{\Delta V_{out}} = \frac{\Delta I_c}{\Delta V_{ce}} \qquad I_b = \textit{constant}$$

$$V_{out} = \frac{R_f}{R_{in}} \times V_{in} \qquad V_{out} = -\left(\frac{R_f V_1}{R_1} + \frac{R_f V_2}{R_2} + \ldots \frac{V_n R_f}{R_n} \right)$$

$$V_{out} = \left(1 + \frac{R_f}{R_{in}} \right) \quad V_{in} \qquad V_{out} = -\frac{1}{CR_{in}} \int V_{in}\,(t)\,dt$$

Boltzmann's constant = 1,38 × 10^{-23} J/k

Electron charge = 1,6 × 10^{-19} C

Copyright reserved