higher education & training

Department:
Higher Education and Training
REPUBLIC OF SOUTH AFRICA

T760**(E)**(J29)T

NATIONAL CERTIFICATE

INDUSTRIAL ELECTRONICS N2

(8080602)

25 July 2019 (X-Paper)
09:00–12:00

This question paper consists of 7 pages and a formula sheet of 2 pages.

Copyright reserved

DEPARTMENT OF HIGHER EDUCATION AND TRAINING
REPUBLIC OF SOUTH AFRICA

NATIONAL CERTIFICATE
INDUSTRIAL ELECTRONICS N2
TIME: 3 HOURS
MARKS: 100

INSTRUCTIONS AND INFORMATION

1. Answer ALL the questions.
2. Read ALL the questions carefully.
3. Number the answers according to the numbering system used in this question paper.
4. Write neatly and legibly.

Copyright reserved

QUESTION 1

Choose a term from COLUMN B that matches a symbol in COLUMN A. Write only the letter (A–M) next to the question number (1.1–1.10) in the ANSWER BOOK.

COLUMN A		COLUMN B
1.1		A NPN transistor
1.2	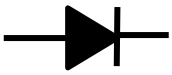	B battery
1.3	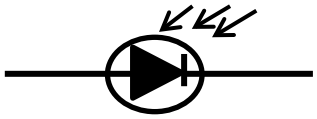	C pure resistor
1.4		D switch
1.5	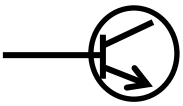	E light-dependent resistor
1.6	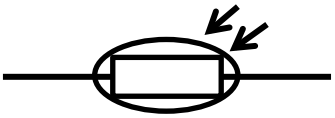	F Varactor diode
1.7	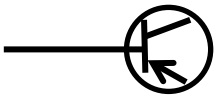	G PN junction diode
1.8	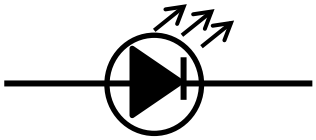	H PNP transistor
1.9	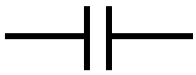	I voltmeter
1.10	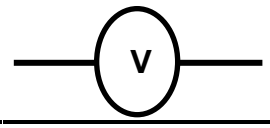	J photodiode
		K light-emitting diode
		L capacitor
		M Zener diode

(10 × 1) **[10]**

QUESTION 2

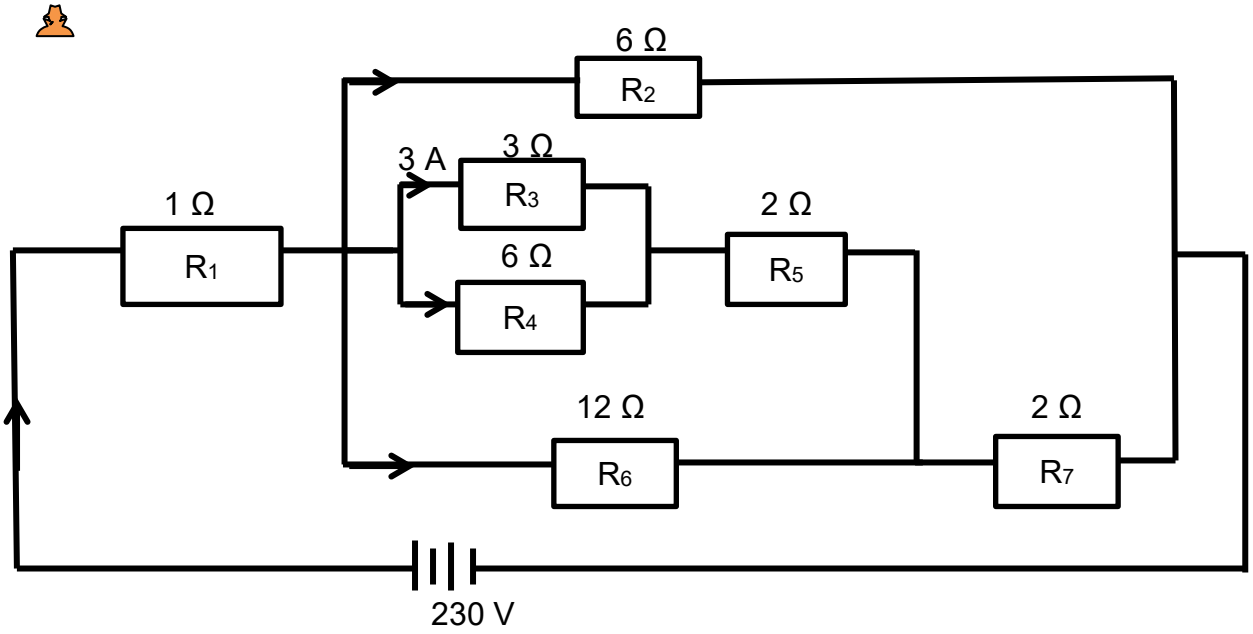

Calculate each of the following:

2.1 Current passing through R_4 (3)

2.2 Voltage drop across R_5 (3)

2.3 Current passing through R_6 (3)

2.4 Current passing through R_2 (7)

2.5 Current passing through R_1 (4)

[20]

QUESTION 3

3.1 Express each of the following radians in degrees:

3.1.1 $\frac{\pi}{2}$ rad

3.1.2 $\frac{\pi}{3}$ rad

(2 × 2) (4)

3.2 An alternating voltage is given by $e = 100\sin 314{,}28t$ V.

Determine each of the following:

3.2.1	Maximum value of the alternating voltage	(1)
3.2.2	Rms value of the alternating voltage	(2)
3.2.3	Average value of the alternating voltage	(2)
3.2.4	Crest factor	(2)
3.2.5	Form factor	(2)
3.2.6	Frequency of the alternating voltage	(2)
3.2.7	Instantaneous voltage 2 ms after switch on	(3)

[18]

QUESTION 4

4.1 Refer to the circuit diagram below and explain the operational principle if point A is positive with respect to point B and if point C is positive with respect to point B. Show the path of current.

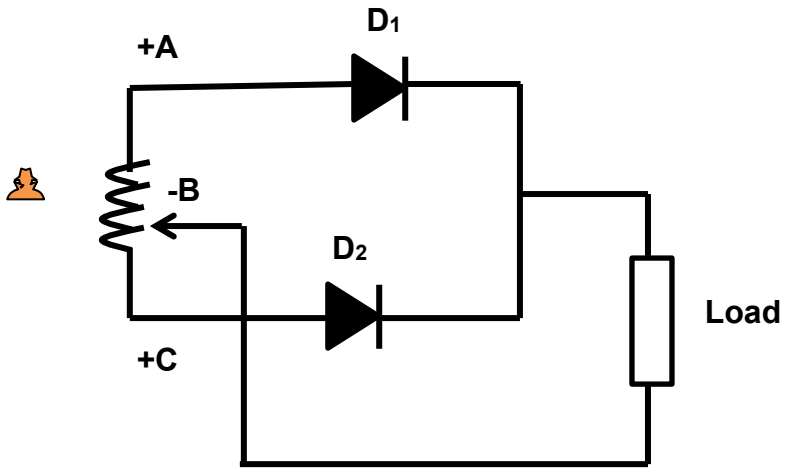

(6)

4.2 Draw the input and output waves of the circuit in QUESTION 4.1. (4)

4.3 Draw the circuit symbol and characteristic curve for a photodiode. (4)

[14]

QUESTION 5

5.1 What is the basic operation of each the following transistor terminals:

5.1.1 Emitter

5.1.2 Base

5.1.3 Collector

(3 × 1) (3)

5.2 Conventional current flow is in the direction where the emitter is pointing.

Draw a neat, labelled circuit that shows the basic operation of an NPN transistor under the principle of conventional current flow. (6)

5.3 Show by means of a circuit diagram how each of the following measuring instruments are connected in a circuit when measuring:

5.3.1 Ammeter

5.3.2 Voltmeter

5.3.3 Ohmmeter

(3 × 2) (6)

5.4 Define a *measuring instrument*. (2)

[17]

QUESTION 6

6.1 Name TWO types of thermistors. (2)

6.2 Draw the circuit symbol and characteristic curve for the thermistors mentioned in QUESTION 6.1. (4)

6.3 Discuss in detail the operating principle of the thermistors mentioned in QUESTION 6.1. (4)

6.4 Calculate the overall gain of the network given below using:

6.4.1 The product (ratio) method

6.4.2 The sum (decibels) method

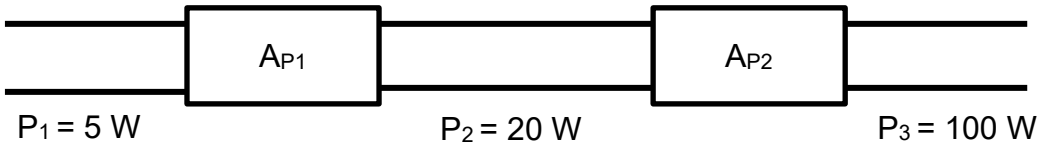

(2 × 3) (6)

[16]

QUESTION 7

Connect a 180° phase shift displacement of a synchro-system, by filling in the correct receiver for each transmitter in the table below.

Transmitter	Receiver
R1 →	
R2 →	
S1 →	
S2 →	
S3 →	

[5]

TOTAL: 100

Copyright reserved

FORMULA SHEET

Direct-current theory

$V = I \cdot R$

$P = V \cdot I$

$P = \frac{V^2}{R}$

$P = I^2 \cdot R$

$R_T = R_1 + R_2$

$\frac{1}{R_T} = \frac{1}{R_1} + \frac{1}{R_2} + \frac{1}{R_3}$

$R_T = \frac{R_1 \times R_2}{R_1 + R_2}$

$I_1 = \frac{R_2}{R_1 + R_2} \times I_T$

Alternating-current theory

$t = \frac{1}{f}$

$e = E_m Sin\theta$

$e = E_m Sin\omega t$

$e = E_m Sin2\pi ft$

$i = I_m Sin\theta$

$i = I_m Sin\omega t$

$V_{rms} = 0{,}707 V_{max}$

$I_{rms} = 0{,}707 I_{max}$

$V_{ave} = 0{,}637 V_{max}$

$I_{ave} = 0{,}637 I_{max}$

$Form\ factor = \frac{rms\ value}{average\ value}$

$Crest\ factor = \frac{maximum\ value}{rms\ value}$

$E_{ave} = \frac{e_1 + e_2 + e_3 + e_4 + e_5 + ...e_n}{n}$

$I_{ave} = \frac{i_1 + i_2 + i_3 + i_4 + i_5 + ...i_n}{n}$

$\omega = 2\pi f$

$E_{rms} = \sqrt{\frac{e_1^2 + e_2^2 + e_3^2 + e_4^2 + e_5^2 + ...e_n^2}{n}}$

$I_{rms} = \sqrt{\frac{i_1^2 + i_2^2 + i_3^2 + i_4^2 + i_5^2 + ...i_n^2}{n}}$

$X_L = 2\pi fL$

$X_C = \frac{1}{2\pi fC}$

$V = I \cdot R$

$V_T = \sqrt{V_R{}^2 + V_C{}^2}$

$V_T = \sqrt{V_R{}^2 + V_L{}^2}$

$V_T = \sqrt{V_R{}^2 + (V_L \sim V_C)^2}$

$Z = \sqrt{R^2 + (X_L \sim X_C)^2}$

$Z = \sqrt{R^2 + X_L{}^2}$

$Z = \sqrt{R^2 + X_C{}^2}$

$I = \frac{V_T}{Z}$

$I_R = \frac{V_T}{R}$

$I_L = \frac{V_T}{X_L}$

$I_C = \frac{V_T}{X_C}$

$I_T = \sqrt{I_R{}^2 + I_X{}^2}$

$I_X = I_L \sim I_C$

Copyright reserved

$V_L = I \cdot X_L$ $V_C = I \cdot X_C$ $Z = \frac{V}{I_T}$

$\theta = \tan^{-1}\frac{I_X}{I_R}$ $\theta = \cos^{-1}\frac{I_R}{I_T}$ $\theta = \cos^{-1}\frac{R}{Z}$

$f_r = \frac{1}{2\pi\sqrt{LC}}$

Measuring instruments

$R_{SH} = \frac{I_M R_M}{I_{SH}}$ $R_S = \frac{V}{I_M} - R_M$

Transistors

$I_E = I_C + I_B$

Decibel ratios

$N = 10\log\frac{P_{OUT}}{P_{IN}}$ $N = 20\log\frac{I_{OUT}}{I_{IN}} + 10\log\frac{R_{OUT}}{R_{IN}}$ $N = 20\log\frac{V_{OUT}}{V_{IN}} + 10\log\frac{R_{IN}}{R_{OUT}}$

If R_{IN}=R_{OUT}*:*

$N = 20\log\frac{V_{OUT}}{V_{IN}}$ $N = 20\log\frac{I_{OUT}}{I_{IN}}$

Resistance

$R = \frac{\rho\ell}{A}$ $A = \frac{\pi d}{4}$

Copyright reserved