higher education & training

Department:
Higher Education and Training
REPUBLIC OF SOUTH AFRICA

MARKING GUIDELINE

NATIONAL CERTIFICATE

INDUSTRIAL ELECTRONICS N2

29 JULY 2019

This marking guideline consists of 9 pages.

Copyright reserved

QUESTION 1

1.1 D
1.2 G
1.3 J
1.4 B
1.5 A
1.6 E
1.7 H
1.8 K
1.9 L
1.10 I

(10 × 1) **[10]**

QUESTION 2

2.1 $V_{R3} = I \times R_3$
$V_{R3} = 3 \times 3 = 9\ \text{V}$✓

R_3 and R_4 are in parallel and therefore the voltage is the same.

$$I_{R4} = \frac{V}{R_4}$$

$$I_{R4} = \frac{9\ \text{V}}{6}$$✓

$I_{R4} = 1{,}5\ \text{A}$✓ (3)

2.2 $I_{R5} = I_{R3} + I_{R4}$
$I_{R5} = 3 + 1{,}5 = 4{,}5\ \text{A}$✓

$V_{R5} = I \times R_5$
$V_{R5} = 4{,}5 \times 2 = 9\ \text{V}$✓✓ (3)

2.3 Because R_6 is parallel to R_3, R_4 and R_5

$V_{R6} = V_{R3/4} + V_{R5}$✓

$V_{R6} = 9\ \text{V} + 9\ \text{V} = 18\ \text{V}$✓

$$I_{R6} = \frac{V}{R_6} = \frac{18}{12} = 1{,}5\ \text{A}$$✓ (3)

2.4 Current passing through R_7 is

$I_{R7} = I_{R5} + I_{R6}$
$I_{R7} = 4{,}5 + 1{,}5 = 6\ \text{A}$✓

$$R_{P1} = \frac{R_3 \times R_4}{R_3 + R_4} + R_5$$

$$R_{P1} = \frac{3 \times 6}{3 + 6} + 2$$

$R_{P1} = 4\ \Omega$✓

$$R_{P2} = \frac{R_{P1} \times R_6}{R_{P1} + R_6} + R_7$$

$$R_{P2} = \frac{4 \times 12}{4 + 12} + 2$$

$R_{P2} = 5\ \Omega$✓

$V_P = I \times R_{P2}$
$V_P = 6 \times 5 = 30\ \text{V}$✓

R_2 is parallel to R_3, R_4, R_5, R_6 and R_7 and therefore the voltage is the same.✓

$$I_{R2} = \frac{V}{R_2}$$

$I_{R2} = \frac{30}{6} = 5\ \text{A}$✓✓

OR

$I_7 = I_6 + I_5 = 1{,}5 + 4{,}5$✓ $= 6\text{A}$ ✓

$V_7 = R_7 \times I_7 = 2 \times 6$✓ $= 12\text{V}$✓

$V_6 + V_7 = 18 + 12 = 30\text{V}$✓

$V_6 + V_7 = V_2 = 30\text{V}$

$I_2 = V_2/R_2 = 30/6$✓ $= 5\text{A}$✓ (7)

2.5 $I_T = I_{R2} + I_{R6} + I_{R5}$✓
$I_T = 5\ \text{A} + 1{,}5\ \text{A} + 4{,}5\ \text{A}$✓✓
$I_T = 11\ \text{A}$✓ (4)
[20]

QUESTION 3

3.1 3.1.1 $\frac{\pi}{2}\text{ rad} = \frac{\pi}{2} \times \frac{180}{\pi} = 90°$✓✓

3.1.2 $\frac{\pi}{3}\text{ rad} = \frac{\pi}{3} \times \frac{180}{\pi} = 60°$✓✓

(2 × 2) (4)

3.2 3.2.1 Maximum value:

$E_m = 100\text{ V}$✓ (1)

3.2.2 RMS value:

$E_{RMS} = 0{,}707 \times E_m$
$E_{RMS} = 0{,}707 \times 100$✓
$E_{RMS} = 70{,}7\text{ V}$✓ (2)

3.2.3 Average value:

$E_{AVE} = 0{,}637 \times E_m$
$E_{AVE} = 0{,}637 \times 100$✓
$E_{AVE} = 63{,}7\text{ V}$✓ (2)

3.2.4 Crest factor:

$$\text{Crest factor} = \frac{\text{Max value}}{\text{RMS value}}$$

$$\text{Crest factor} = \frac{100}{70{,}7}$$✓

$\text{Crest factor} = 1{,}414$✓ (2)

3.2.5 Form Factor:

$$\text{Form factor} = \frac{\text{RMS value}}{\text{AVE value}}$$

$$\text{Form factor} = \frac{70{,}7}{63{,}7}$$✓

$\text{Form factor} = 1{,}11$✓ (2)

3.2.6 Frequency of the alternating voltage:

$\omega = 2\pi f$
$314{,}28 = 2\pi f$✓
$f = \frac{314{,}28}{2\pi}$
$f = 50\text{ Hz}$✓ (2)

3.2.7 Instantaneous voltage 2 ms after switch on:

$e = 100 \sin 314{,}28\, t$
$e = 100 \sin(314{,}28 \times 2 \times 10^{-3} \times 57{,}3)$✓
$e = 58{,}802$ V✓✓ (3)
[18]

QUESTION 4

4.1

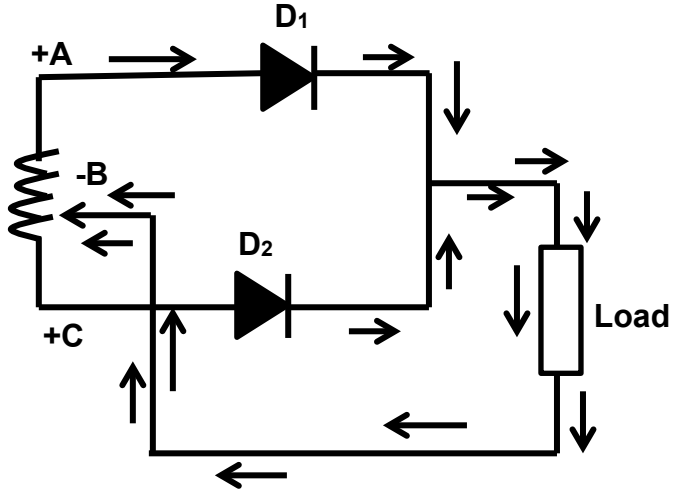

✓✓ for path current follows

When point A is positive with respect to point B, diode D_1 is forward biased✓ and conducting and D_2 is reverse biased.✓

When point C is positive with respect to point B, diode D_2 is forward biased✓ and conducting and diode D_1 is reverse biased.✓ (6)

4.2

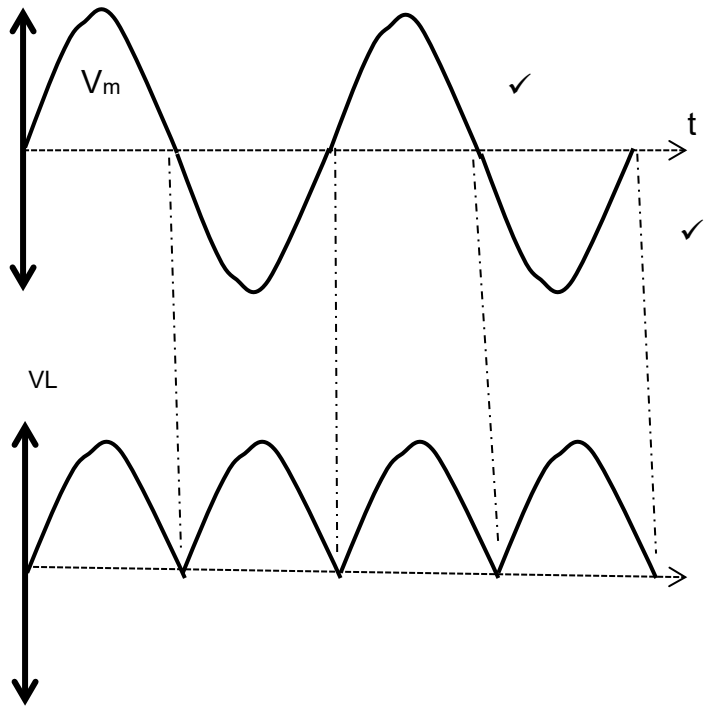

✓✓
(tick for 1st and 2nd cycle)

(4)

4.3

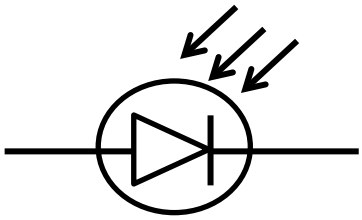

✓✓

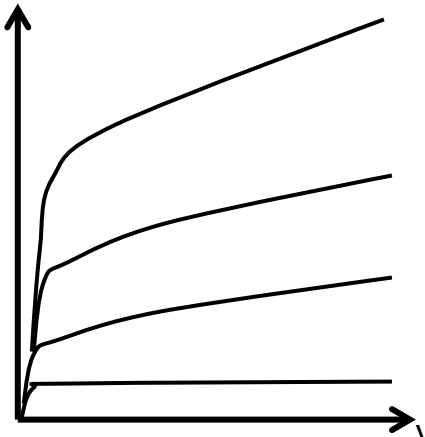

V_R (V)✓✓ (graph and label) (4)

[14]

QUESTION 5

5.1 5.1.1 The source of charge carriers in the transistor
5.1.2 The control electrode of the transistor
5.1.3 The area where the charge carriers are collected

(3 × 1) (3)

5.2

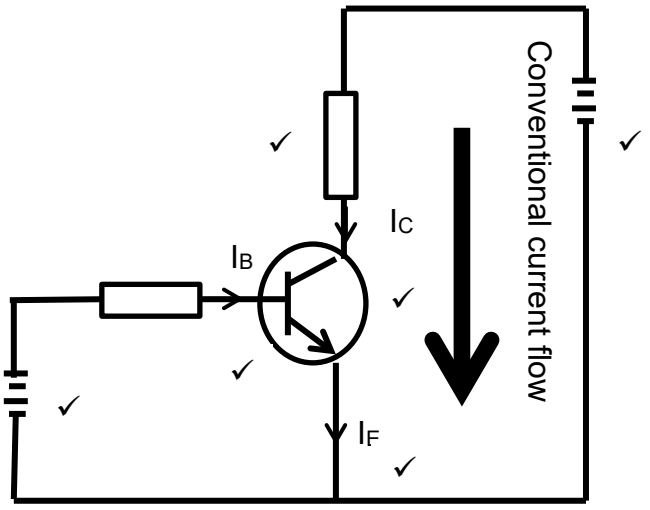

(6)

5.3 5.3.1

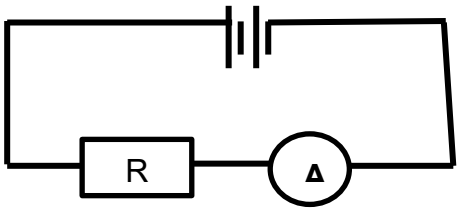

1 mark for ammeter
1 mark for series connection

5.3.2

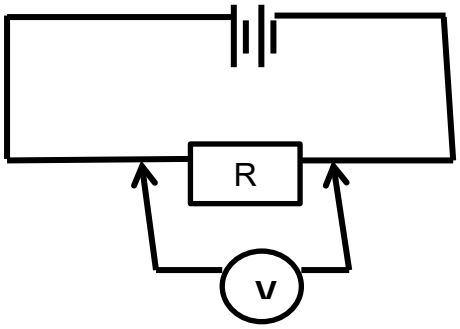

1 mark for voltmeter
1 mark for parallel connection

5.3.3

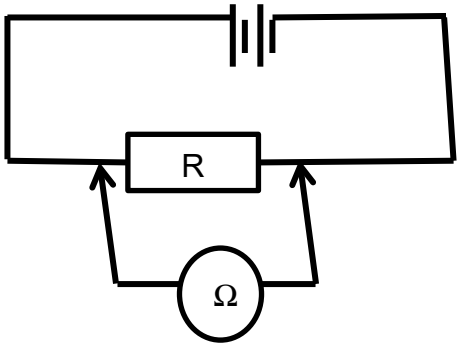

1 mark for ohmmeter
1 mark for parallel connection

(3 × 2) (6)

5.4 A measuring instrument is a device that can be used to determine the value or magnitude of an unknown quantity or variable. (2)
[17]

QUESTION 6

6.1
- Negative temperature coefficient
- Positive temperature coefficient (2)

6.2



(a mark each for the symbols; a mark for each graph)

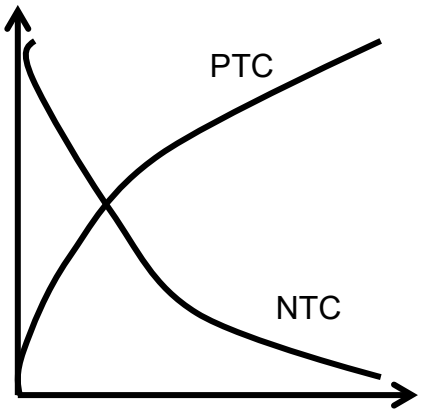

may use two separate graphs (4)

6.3
- Negative temperature coefficient: When the resistance decreases✓ the temperature increases.✓
- Positive temperature coefficient: When the resistance increases✓ the temperature will also increase.✓ (4)

6.4.1 Overall gain as a product ratio:

$$A_P = \frac{P_2}{P_1} \times \frac{P_3}{P_2} ✓$$

$$A_P = \frac{20}{5} \times \frac{100}{20} ✓$$

$$A_P = 20 ✓$$

6.4.2 Overall gain as a sum in decibels:

$$\mathrm{A_P} = 10\log_{10}\frac{\mathrm{P_2}}{\mathrm{P_1}} + 10\log_{10}\frac{\mathrm{P_3}}{\mathrm{P_2}} ✓$$

$$\mathrm{A_P} = 10\log_{10}\frac{20}{5} + 10\log_{10}\frac{100}{20} ✓$$

$$\mathrm{A_P} = 10\log 4 + 10\log 5$$

$$\mathrm{A_P} = 6{,}021 + 6{,}989$$

$$\mathrm{A_P} = 13{,}01\ \mathrm{dB} ✓$$

(2 × 3) (6)

[16]

QUESTION 7

Tr	Re
R1 →	**R2✓**
R2 →	**R1✓**
S1 →	**S1✓**
S2 →	**S2✓**
S3 →	**S3✓**

[5]

TOTAL: 100

Copyright reserved