higher education & training

Department:
Higher Education and Training
REPUBLIC OF SOUTH AFRICA

MARKING GUIDELINE

NATIONAL CERTIFICATE

INDUSTRIAL ELECTRONICS N2

25 JULY 2018

This marking guideline consists of 7 pages.

Copyright reserved

QUESTION 1

1.1. Total opposition to flow of alternating current in a circuit comprising of resistors and reactances

1.2 Smallest quantity of matter that can exist by itself and still retain all the properties of the original substance

1.3 Potential difference which exists across a resistance of one ohm when a current of one ampere is passed through it

1.4 That value of an alternating quantity that will produce the same heat energy as a direct quantity when applied to the same resistance

1.5 Circuit that converts any negative voltage to positive voltage OR electrical device/circuit that converts alternating current to direct current

(5 × 2) **[10]**

QUESTION 2

2.1
- Type of material
- Length of conductor
- Cross-sectional area of conductor
- Temperature of conductor

(4)

2.2 2.2.1

$$R = \frac{R \times R}{R + R}$$

$$R = \frac{6 \times 3}{6+3}\checkmark$$

$$R = \frac{18}{9}\checkmark$$

$$R = 2\Omega\checkmark$$

$R = R_3 + R_p$

$R = 3 + 2$

$R = 5\Omega\checkmark$

$$R = \frac{R \times R}{R + R}$$

$$R = \frac{10 \times 5}{10 + 5}$$

$$R = \frac{50}{15}$$

$$R = 3{,}33\Omega\checkmark\checkmark$$

(6)

2.2.2 $I_T = \frac{V_T}{R_T}$

$I_T = \frac{10}{3.33}$ ✓

$I_T = 3{,}003\ A$ ✓

$I_1 = I_T - I_2$

$I_1 = 3{,}003 - 0{,}833$ ✓

$I_1 = 2{,}170\ A$ ✓

$I_3 = \frac{V}{R_3}$

$I = \frac{10}{10}$ ✓

$I = 1\ A$ ✓ (6)

2.2.3 $V = I \times R_4$

$V = 3{,}003 \times 3$ ✓

$V = 9{,}009$ Volts ✓ (2)

[18]

QUESTION 3

3.1 3.1.1 $Z = \sqrt{R^2 + (\boldsymbol{X_c} - \boldsymbol{X_L})^2}$

$Z = \sqrt{50^2 + (600 - 400)^2}$

$Z = \sqrt{42\,500}$ ✓

$\boldsymbol{Z} = 206{,}155\ \Omega$ ✓

$I = \frac{V}{Z}$

$I = 90/206{,}155$ ✓

$I = 0{,}437A$ ✓ (4)

3.1.2 $V_R = IR$

$V_R = 0{,}437 \times 50$ ✓

$V_R = 21{,}828\ V$ ✓

$V_L = IX_L$

$V_L = 0{,}437 \times 400$ ✓

$V_L = 174{,}8\ V$ ✓

$V_R = IR$

$V_C = 0{,}437 \times 600$ ✓

$V_C = 262{,}2\ V$ ✓ (6)

3.1.3 $\cos\theta = \frac{R}{Z}$

$\theta = \cos^{-1}\frac{R}{Z}$✓

$\theta = \cos^{-1}\frac{50}{206,155}$✓

$\theta = 75,964°$✓ (3)

3.1.4 $X_L = 2\pi fL$

$L = \frac{X_L}{2\pi f}$

$L = \frac{400}{2\pi(50)}$ ✓

$L = 1,273H$ ✓

$X_c = \frac{1}{2\pi fC}$

$C = \frac{1}{2\pi f X_c}$

$C = \frac{1}{2\pi(50)(600)}$ ✓

$C = 5,305 \times 10^{-6}\ f$✓ (4)

3.2

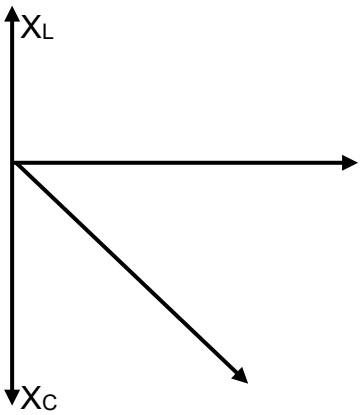

R ✓

Z (1)

[18]

QUESTION 4

4.1
- 1st shell (K) there can only be 2 electrons.
- 2nd shell (L) there can only be 8 electrons.
- 3rd shell (M) there can only be 18 electrons.
- 4th shell (N) there can only be 32 electrons. (4)

4.2
- Phosphorus
- Antimony
- Arsenic (3)

4.3

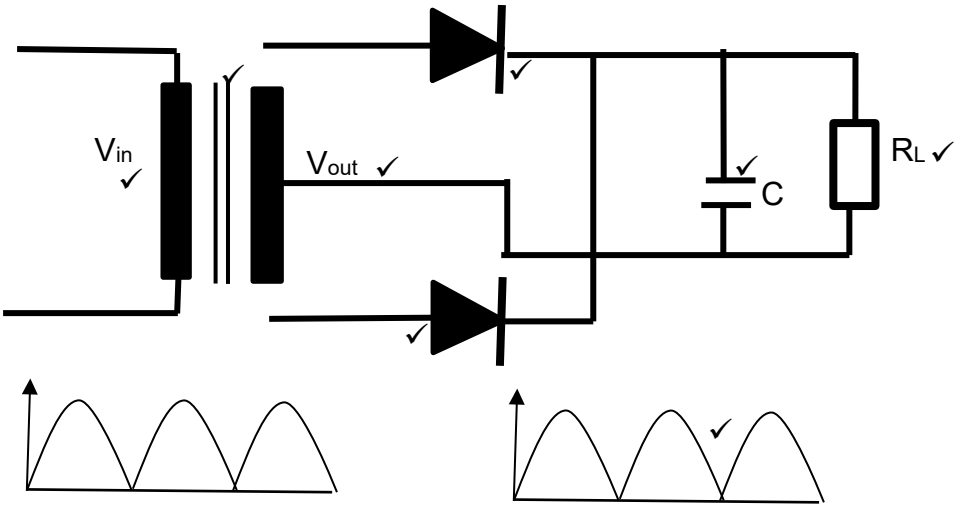

(8)
[15]

QUESTION 5

5.1

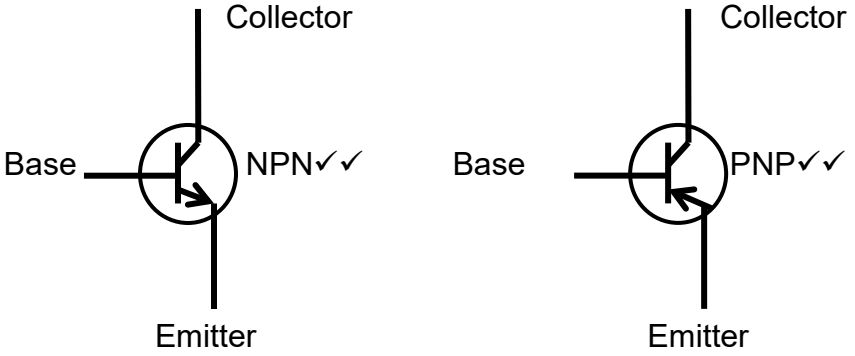

(4)

5.2 When the base of the transistor is made more positive than the emitter✓ and the collector is much more positive than the base,✓ the transistor is said to be forward-biased (switched on).✓ A small conventional current would flow from the base to the emitter✓ and a much larger current would flow from the collector to the emitter.✓ This means the base current and the collector current flow into the emitter.✓ However, if the voltage applied to the base is less than 0,6V the transistor is reverse-biased (off) and no current flows. (10)

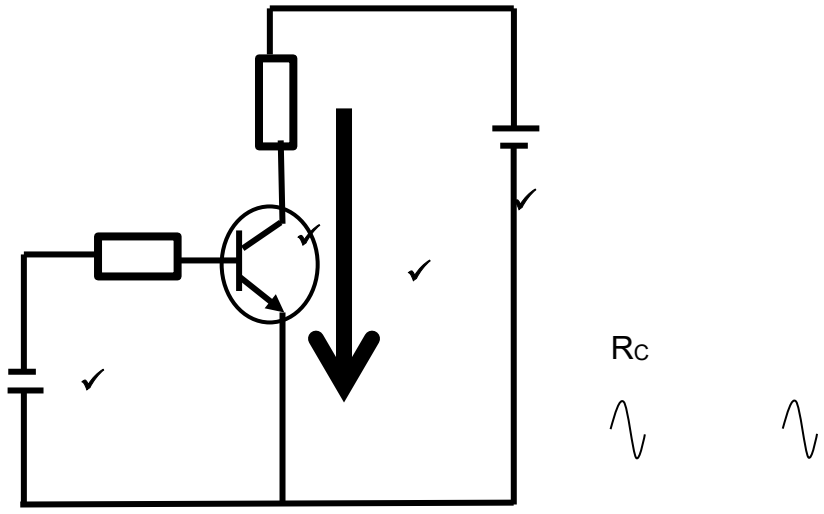

5.3 5.3.1 Achieved by the motion of the coil through the air surrounding it, and is independent of the current passing through the coil

5.3.2 Achieved by induced effects in the coil as it rotates in the magnetic field, provided the coil forms part of a closed electrical circuit

(2 × 2) (4)
[18]

QUESTION 6

6.1 P_{in}= ?, P_{out} = 50 mW, N_1 = 10 dB

$$N = 10\ log\frac{P_{out}}{P_{in}}$$

$$10 = 10\ log\frac{50 \times 10^{-3}}{P_{in}}\ ✓$$

$$antilog\ (1) = \frac{(50 \times 10^{-3})}{P}\ ✓$$

$$P_{in} = \frac{50 \times 10^{-3}}{10}\ ✓$$

P_{in} = 5 m W✓

$$N = 10\ log\frac{P_{out}}{P_{in}}$$

$$N = 10\ log\frac{500 \times 10^{-3}}{50 \times 10^{-3}}\ ✓$$

$N = 10\ dB$✓ (6)

6.2 6.2.1 North pole
6.2.2 South pole
6.2.3 South-north direction

(3 × 1) (3)

6.3 6.3.1 R_1
6.3.2 R_2
6.3.3 S_2
6.3.4 S_3
6.3.5 S_1

(5 × 1) (5)
[14]

QUESTION 7

7.1
- Nickel chrome
- Nickel aluminium (2)

7.2

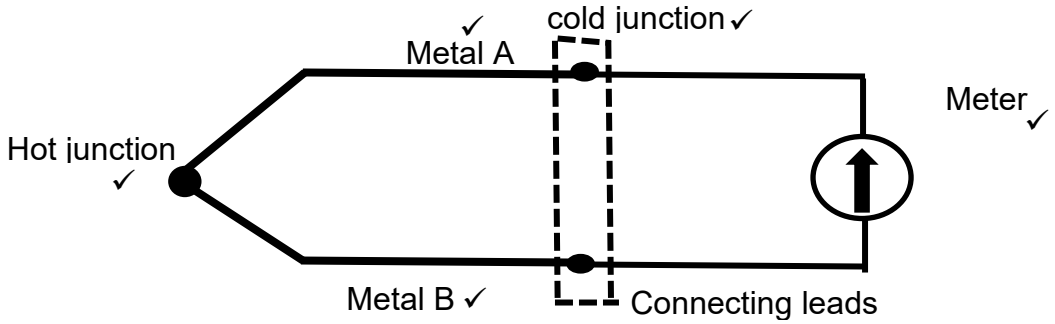

(5)
[7]

TOTAL: 100

Copyright reserved