higher education & training

Department:
Higher Education and Training
REPUBLIC OF SOUTH AFRICA

NATIONAL CERTIFICATE

INDUSTRIAL ELECTRONICS N2

(8080602)

6 April 2021 (X-paper)
09:00–12:00

This question paper consists of 6 pages and a formula sheet of 2 pages.

028Q1A2106

Copyright reserved

DEPARTMENT OF HIGHER EDUCATION AND TRAINING
REPUBLIC OF SOUTH AFRICA

NATIONAL CERTIFICATE
INDUSTRIAL ELECTRONICS N2
TIME: 3 HOURS
MARKS: 100

INSTRUCTIONS AND INFORMATION

1. Answer all the questions.
2. Read all the questions carefully.
3. Number the answers according to the numbering system used in this question paper.
4. Draw all sketches and diagrams in pencil.
5. Drawings must be large, neat and clear.
6. Use only a blue or black pen.
7. Approximate all final answers accurately to THREE decimal places.
8. Write nearly and legibly.

Copyright reserved

QUESTION 1

Indicate whether the following statements are TRUE or FALSE by writing only 'True' or 'False' next to the question number (1.1–1.10) in the ANSWER BOOK.

1.1 The transistor is a three-terminal device that consists of three PN junctions.

1.2 An uneven or non-sinusoidal graph is solved by means of the mid-ordinate rule.

1.3 In an AC circuit, the inductive reactance of the inductor is directly proportional to the frequency.

1.4 The collector current of a transistor will increase when the base emitter forward biased voltage is decreased.

1.5 P-type semiconductor material is formed by using a pentavalent atom.

1.6 A diode acts as a conductor when it is forward biased and as an inductor when it is reverse biased.

1.7 The synchro stator is composed of three windings spaced 180° apart.

1.8 An ohmmeter must be connected in parallel across the circuit or component whose resistance needs to be measured.

1.9 A transducer is a device that converts one form of energy into another.

1.10 A parallel circuit is also known as a voltage divider.

(10 × 1) **[10]**

QUESTION 2

Study the circuit diagram in FIGURE 1 below and answer the questions.

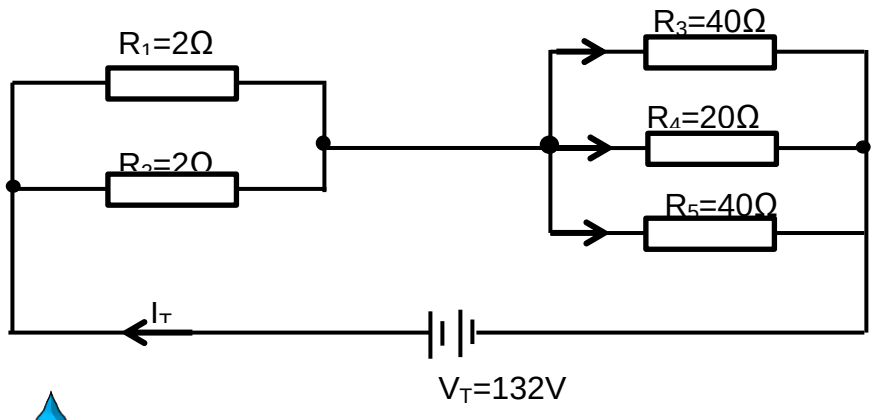

FIGURE 1

Calculate the following:

2.1 The total resistance of the circuit (6)

2.2 The total current in the circuit (2)

2.3 The current passing through R_2, R_4 and R_5 (10)
[18]

QUESTION 3

3.1 Convert the following radians to degrees:

3.1.1 $\frac{2\pi}{3}$

3.1.2 $\frac{3\pi}{4}$

3.1.3 $\frac{5\pi}{4}$

(3 x 1) (3)

3.2 Study the sketch in FIGURE 2 below and answer the questions.

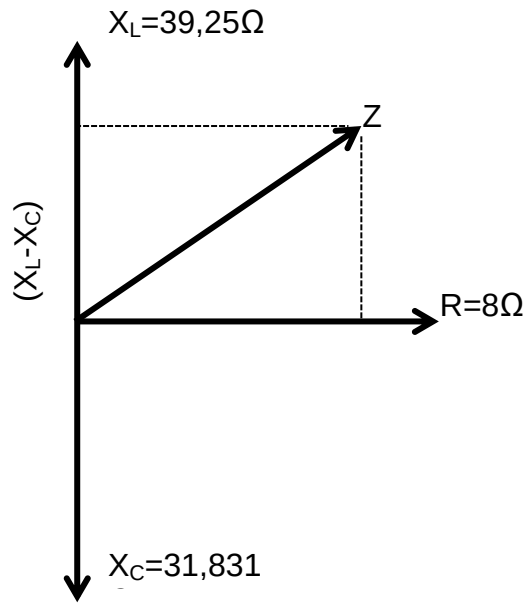

FIGURE 2

Calculate the following, if the supply voltage is 250 V and frequency is 50 Hz

3.2.1 The value of the inductor in mH (3)

3.2.2 The value of the capacitor in µF (3)

Copyright reserved

3.2.3 The impedance (Z) (4)

3.2.4 The supply current (3)

3.2.5 The phase angle (3)

3.3 Draw the circuit diagram for the sketch in FIGURE 2. (1)
[20]

QUESTION 4

4.1 Explain the following forces that act on an orbiting electron:

4.1.1 Force of attraction

4.1.2 Centrifugal force

(2 × 2) (4)

4.2 Explain a covalent bond by means of a neat, labelled diagram. (5)

4.3 Study the diagram of a half-wave rectifier with a smoothing capacitor filter in FIGURE 3 below and answer the question.

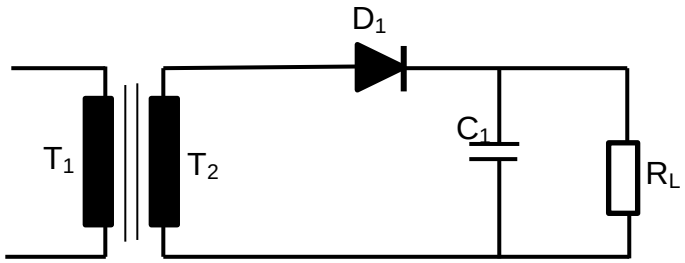

FIGURE 3

Explain the operation of the half-wave rectifier in FIGURE 3. (6)
[15]

QUESTION 5

5.1 Name the regions in which a transistor is operated as the following:

5.1.1 A switch (2)

5.1.2 An amplifier (1)

5.2 Name THREE configurations of a transistor. (3)

5.3 Draw a neat, labelled transistor configuration of a common collector using a PNP transistor. (5)
[11]

QUESTION 6

6.1 6.1.1 Draw a neat, labelled sketch of a construction of a light-dependent resistor (LDR). (5)

6.1.2 Explain the operating principle of the LDR in QUESTION 6.1.1. (2)

6.2 Show by means of a neat graph the difference between underdamping, overdamping and critical damping. (3)

6.3 An operational amplifier has an input impedance of 600 ohms and is connected to a 10-ohm speaker.

Calculate the voltage across the speaker if the input current may not exceed 2 mA with a gain of 40 dB for the amplifier. (6)

[16]

QUESTION 7

7.1 Draw a neat, labelled block diagram of a complete servo-system. (5)

7.2 Graphically illustrate the principle of Lenz's law by using the transformer principle on which synchro- and servo-mechanism operate. (5)

[10]

TOTAL: 100

Copyright reserved

INDUSTRIAL ELECTRONICS N2

FORMULA SHEET

Alternating current theory

$$t = \frac{1}{f} \qquad e = E_m Sin\theta \qquad e = E_m Sin\omega t$$

$$e = E_m Sin2\pi ft \qquad i = I_m Sin\theta \qquad i = I_m Sin\omega t$$

$$V_{rms} = 0{,}707 V_{max} \qquad I_{rms} = 0{,}707 I_{max} \qquad V_{ave} = 0{,}637 V_{max}$$

$$I_{ave} = 0{,}637 I_{max} \qquad Form\ factor = \frac{rms\,value}{average\,value}$$

$$Crest\ factor = \frac{maximum\,value}{rms\,value}$$

$$E_{ave} = \frac{e_1 + e_2 + e_3 + e_4 + e_5 + ...e_n}{n} \qquad I_{ave} = \frac{i_1 + i_2 + i_3 + i_4 + i_5 + ...i_n}{n} \qquad \omega = 2\pi f$$

$$E_{rms} = \sqrt{\frac{e_1^2 + e_2^2 + e_3^2 + e_4^2 + e_5^2 + ...e_n^2}{n}} \qquad I_{rms} = \sqrt{\frac{i_1^2 + i_2^2 + i_3^2 + i_4^2 + i_5^2 + ...i_n^2}{n}}$$

$$X_L = 2\pi fL \qquad X_C = \frac{1}{2\pi fC} \qquad V = I \cdot R$$

$$V_T = \sqrt{{V_R}^2 + {V_C}^2} \qquad V_T = \sqrt{{V_R}^2 + {V_L}^2} \qquad V_T = \sqrt{{V_R}^2 + (V_L \sim V_C)^2}$$

$$Z = \sqrt{R^2 + (X_L \sim X_C)^2} \qquad Z = \sqrt{R^2 + {X_L}^2} \qquad Z = \sqrt{R^2 + {X_C}^2}$$

$$I = \frac{V_T}{Z} \qquad I_R = \frac{V_T}{R} \qquad I_L = \frac{V_T}{X_L}$$

$$I_C = \frac{V_T}{X_C} \qquad I_T = \sqrt{{I_R}^2 + {I_X}^2} \qquad I_X = I_L \sim I_C$$

$$V_L = I \cdot X_L \qquad V_C = I \cdot X_C \qquad Z = \frac{V}{I_T}$$

$$\theta = \tan^{-1}\frac{I_X}{I_R} \qquad \theta = \cos^{-1}\frac{I_R}{I_T} \qquad \theta = \cos^{-1}\frac{R}{Z}$$

$$f_r = \frac{1}{2\pi\sqrt{LC}}$$

Copyright reserved

Direct current theory

$V = I \cdot R$

$P = V \cdot I$

$P = \frac{V^2}{R}$

$P = I^2 \cdot R$

$R_T = R_1 + R_2$

$\frac{1}{R_T} = \frac{1}{R_1} + \frac{1}{R_2} + \frac{1}{R_3}$

$R_T = \frac{R_1 \times R_2}{R_1 + R_2}$

$I_1 = \frac{R_2}{R_1 + R_2} \times I_T$

Measuring instruments

$R_{SH} = \frac{I_M R_M}{I_{SH}}$

$R_S = \frac{V}{I_M} - R_M$

Transistors

$I_E = I_C + I_B$

Decibel ratios

$N = 10 \log \frac{P_{OUT}}{P_{IN}}$

$N = 20 \log \frac{I_{OUT}}{I_{IN}} + 10 \log \frac{R_{OUT}}{R_{IN}}$

$N = 20 \log \frac{V_{OUT}}{V_{IN}} + 10 \log \frac{R_{IN}}{R_{OUT}}$

If R_{IN}=R_{OUT}:

$N = 20 \log \frac{V_{OUT}}{V_{IN}}$

$N = 20 \log \frac{I_{OUT}}{I_{IN}}$

Resistance

$R = \frac{\rho \ell}{A}$

$A = \frac{\pi d}{4}$

Copyright reserved