higher education & training

Department:
Higher Education and Training
REPUBLIC OF SOUTH AFRICA

NATIONAL CERTIFICATE

INDUSTRIAL ELECTRONICS N2

(8080602)

30 March 2020 (X-paper)
09:00–12:00

This question paper consists of 6 pages.

001Q1A2030

Copyright reserved

DEPARTMENT OF HIGHER EDUCATION AND TRAINING
REPUBLIC OF SOUTH AFRICA

NATIONAL CERTIFICATE
INDUSTRIAL ELECTRONICS N2
TIME: 3 HOURS
MARKS: 100

INSTRUCTIONS AND INFORMATION

1. Answer all the questions.
2. Read all the questions carefully.
3. Number the answers according to the numbering system used in this question paper.
4. Write neatly and legibly.

Copyright reserved

QUESTION 1

Various options are given as possible answers to the following questions. Choose the answer and write only the letter (A–D) next to the question number (1.1–1.5) in the ANSWER BOOK.

1.1 A diode acts as a … when forward biased.

A semiconductor
B insulator
C rectifier
D conductor

1.2 A P-type semiconductor is formed by adding … atoms.

A pentavalent
B trivalent
C silicon
D germanium

1.3 Inductive reactance is directly proportional to the …

A current.
B voltage.
C resistance.
D frequency.

1.4 A transistor is a three-terminal device that consists of …

A three PN-junctions.
B two PN-junctions.
C one PN-junction.
D four PN-junctions.

1.5 A semiconductor diode is a … PN-junction device.

A three-terminal
B two-terminal
C four-terminal
D six-terminal

(5 × 2) **[10]**

QUESTION 2

2.1 Use Kirchhoff's law to calculate the unknown current I_4 in the circuit below.

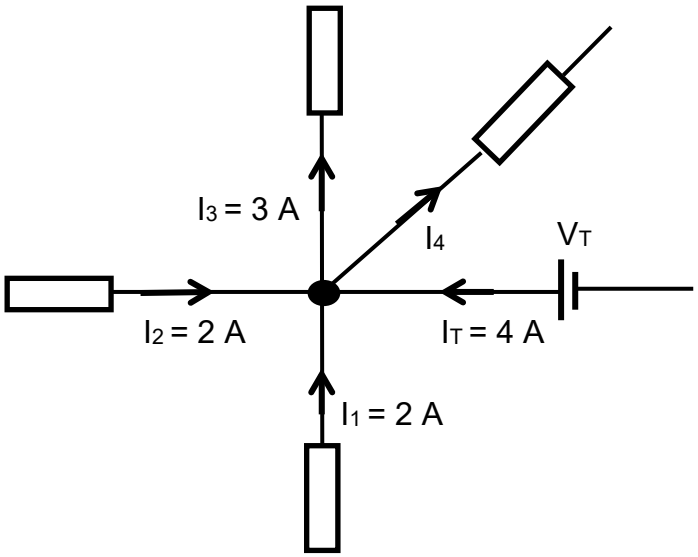

(4)

2.2

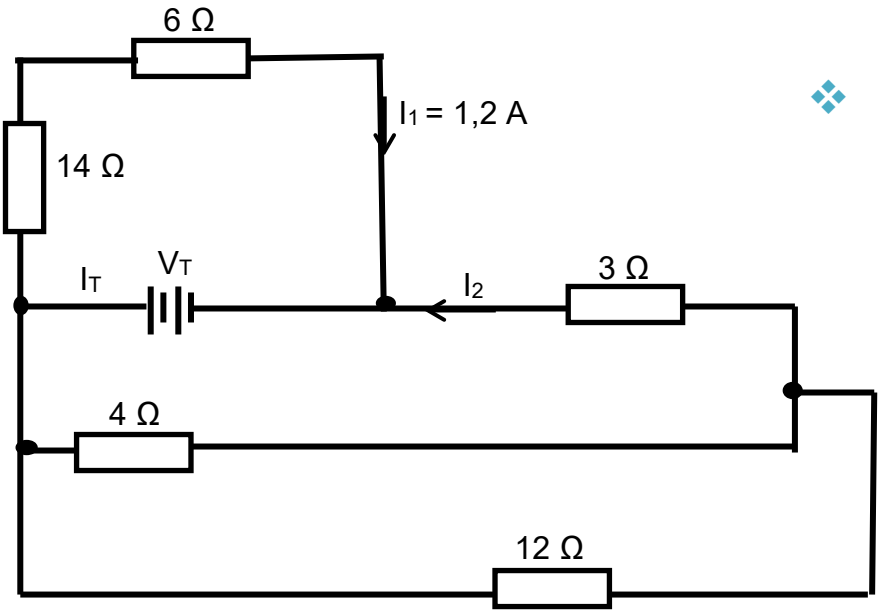

Refer to the diagram and use Ohm's law to calculate the following:

2.2.1 Total voltage of the circuit (5)

2.2.2 Total resistance of the circuit (6)

2.2.3 Current I_2 (4)

[19]

QUESTION 3

3.1 Three electrical circuits with AC source of variable frequency are shown below. Initially the current flowing in each circuit is the same.

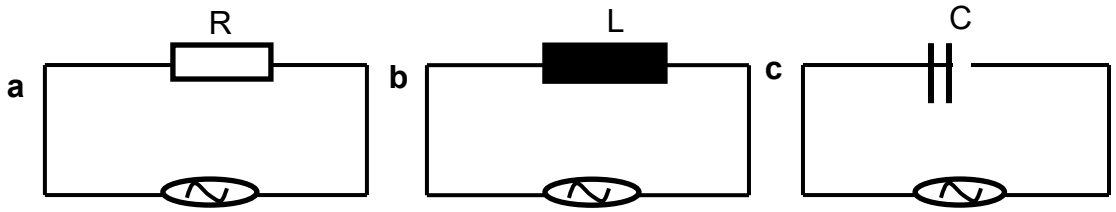

3.1.1 How will the current flowing in each circuit be affected if the frequency of the applied AC source is increased? (3)

3.1.2 What is the relationship between voltage and current in each circuit? (3)

3.2

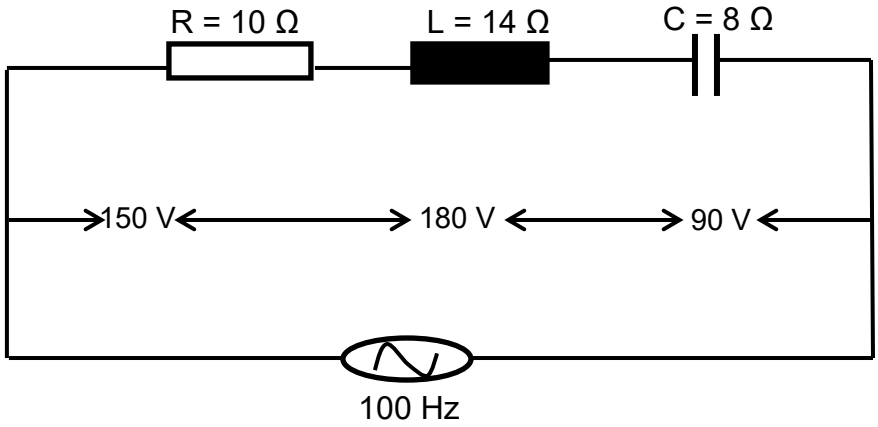

3.2.1 Refer to the circuit diagram and calculate the following:

(a) Supply voltage (2)

(b) Impedance (2)

(c) Current in the circuit (2)

(d) Value of the capacitor (2)

(e) Value of the inductor (2)

(f) Phase angle (2)

3.2.2 Draw a vector diagram of the above circuit. (2)

[20]

Copyright reserved

QUESTION 4

4.1 Name TWO types of bias voltages that may be applied on a diode. (2)

4.2 Show, by means of separate circuit diagrams, the operation of a diode with forward and reverse bias. Show a diode, bulb and DC supply. (3 + 3) (6)

4.3 Draw the circuit symbol for each of the following diodes, give an area where it is commonly used and explain how it should be biased normally:

4.3.1 Photodiode

4.3.2 Light emitter diode

(2 × 3) (6)
[14]

QUESTION 5

5.1 Complete the following table by writing only the answer next to the question number (5.1.1–5.1.6) in the ANSWER BOOK.

REGION	EMITTER-BASE JUNCTION	COLLECTOR-BASE JUNCTION	APPLICATION
Active/Linear	Forward biased	5.1.1 …	5.1.2 …
Saturation	5.1.3 …	Forward biased	5.1.4 …
Cut-off	5.1.5 …	5.1.6 …	Switch

(6 × 1) (6)

5.2 Draw a neat, labelled circuit diagram of a series-type ohmmeter. (5)

5.3 Name TWO basic techniques to damp the pointer of the meter movement. (2)

5.4 State THREE precautions to take when using an ohmmeter. (3)
[16]

QUESTION 6

6.1 The input of a network consists of an impedance of 400 Ω at a current of 30 mA.

Calculate the gain of the system if the output consists of a current of 300 mA and an impedance of 800 Ω. (5)

6.2 Name TWO types of thermistors, draw the circuit symbol for each and explain the operating principle of each by drawing the characteristic curve for each.

(4 + 4) (8)
[13]

QUESTION 7

7.1 Draw a neat, labelled circuit diagram of a synchro system. (4)

7.2 Name FOUR applications of a synchro system. (4)
[8]

TOTAL: 100

Copyright reserved