higher education & training

Department:
Higher Education and Training
REPUBLIC OF SOUTH AFRICA

MARKING GUIDELINE

NATIONAL CERTIFICATE

INDUSTRIAL ELECTRONICS N2

28 MARCH 2018

This marking guideline consists of 6 pages.

Copyright reserved

QUESTION 1

1.1 B
1.2 B
1.3 A
1.4 A
1.5 A
1.6 C
1.7 C
1.8 B
1.9 C
1.10 C

(10 × 1) **[10]**

QUESTION 2

2.1 2.1.1 series

2.1.2 parallel

(2 × 1) (2)

2.2 2.2.1

$$R_p = \frac{R \times R}{R + R}$$

$$R_p = \frac{350 \times 430}{350 + 430}\checkmark$$

$$R_p = \frac{150500}{780}\checkmark$$

$$R_p = 192.949\ \Omega\checkmark$$

$$R_{se} = R_1 + R_p$$
$$R_{se} = 550 + 192{,}949\ \checkmark$$
$$R_{se} = 742{,}949\ \Omega\checkmark$$

$$I_T = \frac{V}{R_T}$$

$$I_T = \frac{230}{742{,}949}\checkmark$$
$$I_T = 0{,}309\ \Omega\checkmark$$

$V = I_T \times R_p$ (for parallel circuit)
$V = 0{,}309 \times 192{,}949\ \checkmark$
$V = 59{,}621\ \text{V}\ \checkmark$

$$I_1 = \frac{V_p}{R_2}$$
$$I_1 = \frac{59{,}621}{350}\checkmark$$
$$I_1 = 0{,}170\text{ A}\checkmark$$ (11)

2.2.2
$$P_{R3} = \frac{V^2}{R_3}\checkmark$$
$$= \frac{(59{,}621)^2\checkmark}{430}$$
$$= 8{,}267\text{ W}\checkmark$$ (3)

2.2.3
$$P = \frac{V^2}{R_3}$$
$$P = \frac{(230)^2}{430}\checkmark\checkmark$$
$$P = 123{,}023\text{ W}\checkmark\checkmark$$ (4)
[20]

QUESTION 3

3.1 3.1.1 $24 \times 2 = 48$ V (2)

3.1.2
$$V_{RMS} = 0{,}707 \times V_m$$
$$V_{RMS} = 0{,}707 \times 24\checkmark$$
$$V_{RMS} = 16{,}968\text{V}\ \checkmark$$
$$V_{Ave} = 0{,}637 \times V_m$$
$$V_{Ave} = 0{,}637 \times 24\ \checkmark$$
$$V_{Ave} = 15{,}288\text{ V}\checkmark$$ (4)

3.1.3
$$f = \frac{1}{t}$$
$$f = \frac{1\ \checkmark}{2 \times 10^{-3}}$$
$$f = 50\text{ Hz}\ \checkmark$$ (2)

3.1.4
$$Form.f = \frac{RMS\ value}{Ave\ value}$$
$$Form.f = \frac{16{,}968}{15{,}288}\checkmark$$
$$Form.f = 1{,}11\ \checkmark$$

$$Crest.f = \frac{MAX\ value}{RMS\ value}\ Crest.f = \frac{24}{16{,}968}\checkmark$$
$$\theta = 1{,}414\ \checkmark$$ (4)

3.2 3.2.1 In a pure resistive circuit the voltage and current are always in phase and the phase angle (θ) is 0˚.

3.2.2 In a capacitive circuit the current leads voltage by an angle of 90°.

3.2.3 In an inductive circuit voltage leads current by an angle of 90°.

(3 × 2) (6)

[18]

QUESTION 4

4.1
- Cut-off region✓ means the emitter-base is not forward-biased.✓✓
- Action or linear region✓ means its emitter-base junction is forward-biased and base-collector junction is reverse-biased.✓✓
- Saturation✓ occurs when the emitter-base and the base-collector junctions are forward-biased.✓✓ (9)

4.2

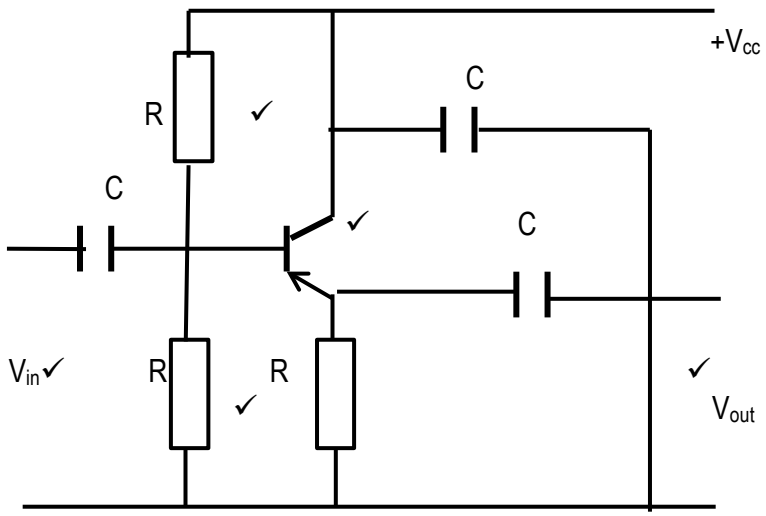

(5)

4.3 $I_E = I_b + I_C$ ✓

$I_C = I_E - I_b$

$I_C = 90 \times 10^{-3} - 20 \times 10^{-6}$ ✓

$I_C = 89{,}9\ mA$ ✓ (3)

[17]

QUESTION 5

5.1 5.1.1 The thermocouple is a temperature-sensitive device consisting of two metals joined at the ends. When one end is heated a potential difference is set up across the two ends, which is proportional to the difference in temperature between the two ends.

5.1.2 The bimetal strip is a temperature-sensitive device that indicates a change in temperature. It consists of two metals of different expansion coefficients fastened together. When heated one metal will expand faster than the other.

(2 × 3) (6)

5.2 5.2.1

$$N = 20log\frac{I_{out}}{I_{in}} \checkmark$$

$$N = 20log\frac{10}{1} \checkmark$$

$$N = 20 \text{ dB} \checkmark$$

5.2.2

$$N = 20log\frac{I_{out}}{I_{in}} + 10log\frac{R_{out}}{R_{in}} \checkmark$$

$$N = 20log\frac{10}{1} + 10log\frac{300}{600} \checkmark$$

$$N = 20 + (-3{,}01)$$

$$N = 20 - 3{,}01$$

$$N = 16{,}99 \text{ dB} \checkmark$$

(2 × 3) (6)

5.3 5.3.1 Lower OR loss in OR decrease in OR any similar answer
5.3.2 Higher OR gain in OR increase in OR any similar answer

(2 × 1) (2)

[14]

QUESTION 6

6.1
- Force of attraction:✓ The electrons are attracted to the positively charged nucleus.✓
- Centrifugal force:✓ The electron revolves around the nucleus at high velocities and is consequently forced away from the nucleus.✓ (4)

6.2

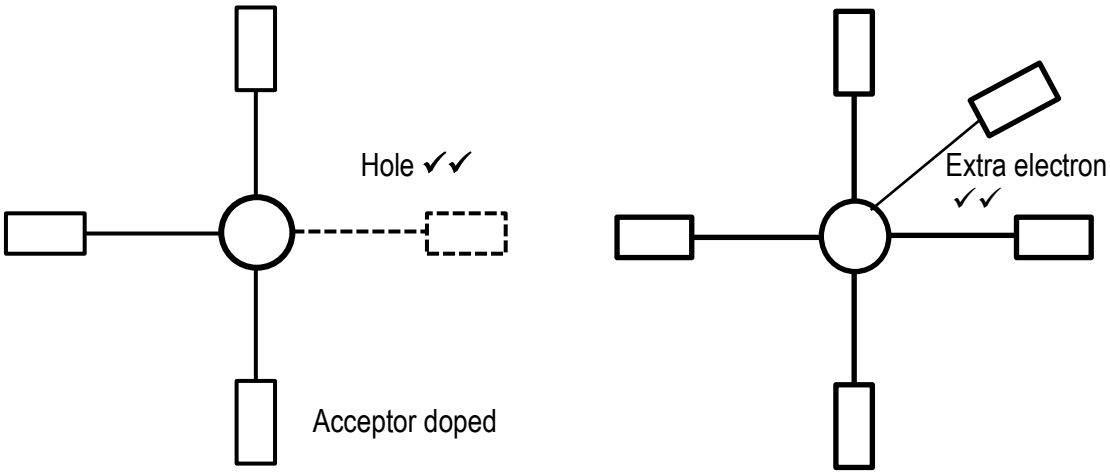

(4)

6.3.1

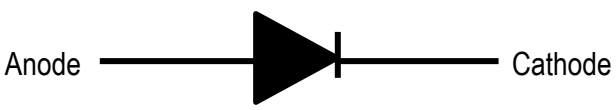

6.3.2

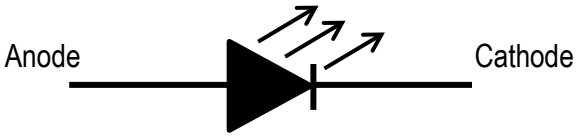

6.3.3

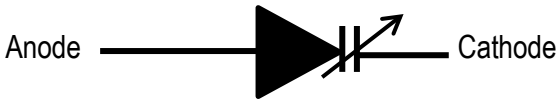

(3 × 2) (6)

QUESTION 7

7.1 The EMF induced in an electric circuit always acts in such a direction that the current it drives around the circuit opposes the change in magnetic flux. (3)

7.2
- Rapid and accurate transmission of information between equipment and stations
- Controlling the course, speed and range of targets or missiles

(2 × 2) (4)
[7]

TOTAL: 100

Copyright reserved