higher education & training

Department:
Higher Education and Training
REPUBLIC OF SOUTH AFRICA

MARKING GUIDELINE

NATIONAL CERTIFICATE

APRIL EXAMINATION

INDUSTRIAL ELECTRONICS N2

31 MARCH 2016

This marking guideline consists of 9 pages.

Copyright reserved

QUESTION 1

1.1 True
1.2 True
1.3 True
1.4 True
1.5 True

(5 x 1) **[5]**

QUESTION 2

2.1

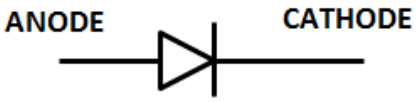

2.2



2.3



2.4

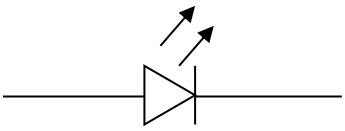

(4 x 1) **[4]**

QUESTION 3

3.1 3.1.1 (a) $R_{s1} = R_5 + R_6$
$= 16 + 45$
$= 61\,\Omega$ ✓

(b) $\frac{1}{R_{p1}} = \frac{1}{R_3} + \frac{1}{R_{s1}} + \frac{1}{R_7}$

$= \frac{1}{10} + \frac{1}{61} + \frac{1}{18}$ ✓

$= 0\,172$ ✓

$= R_{p1} = 5{,}816\,\Omega$ ✓

(c) $R_{s2} = R_{p1} + R_4$
$= 5{,}816 + 40$ ✓
$= 45{,}816\,\Omega$ ✓

(d) $R_{p2} = \frac{R_{s2} \times R_2}{R_{s2} + R_2}$

$= \frac{45{,}816 \times 15}{45{,}816 + 15}$

$= 11{,}3\,\Omega$ ✓✓

(e) $R_T = R_1 + R_{P2}$
$= 30 + 11{,}3$ ✓
$= 41{,}3\,\Omega$ ✓

(11)

3.1.2 $I_T = V_T/R_T$

=2/41,3 ✓
= 48,426 mA ✓

(2)

3.1.3 $P = I^2 \times R$
$= (48{,}426 \times 10^{-3})^2 \times 30$ ✓
$= 0{,}07$ w ✓
(2)

3.2 $I_1 + I_{R3} + I_{R4} = I_{R2}$✓
$I_1 = I_{R2} - (I_{R3} + I_{R4})$ ✓
$= 3{,}1 \times 10^{-3} - (2 \times 10^{-3} + 0{,}6 \times 10^{-3})$✓
$= 3{,}1 \times 10^{-3} - (2{,}6 \times 10^{-3})$✓
$= 0{,}5$ mA✓ (5)
[20]

QUESTION 4

4.1 Frequency = 50 Hz✓
Voltage = 220 V – 240 V✓ (220V is acceptable) (2)

4.2 The form factor of a wave refers to ratio of the RMS value relative to the average of the wave while the crest factor refers to ratio of the maximum value to the RMS value of the wave. ✓✓ (2)

4.3 4.3.1 $X_c = \frac{1}{2\pi FC}$

$C = \frac{1}{2\pi FX_C}$ ✓

$C = \frac{1}{2\pi \times 50 \times 13{,}3}$ ✓

$C = 239{,}33 \times 10^{-6} F$ ✓ (3)

4.3.2 $X_L = 2\pi FL$

$= 2\pi(50)(20 \times 10^{-3})$ ✓

$= 6{,}283\ \Omega$ ✓ (2)

4.3.3 $Z_T = \sqrt{R^2 + (X_L - X_C)^2}$ ✓

$= \sqrt{20^2 + (13{,}3 - 6{,}283)^2}$ ✓

$= 21{,}195\ \Omega$ ✓ (3)

4.3.4 $I_T = \frac{V_T}{Z_T}$

$= \frac{110}{21{,}195}$ ✓

$= 5{,}189\ A$ ✓ (2)

4.3.5 $V_R = I_T R$

$= 5{,}189 \times 20$ ✓

$= 103{,}780\ V$ ✓ (2)

4.3.6 $V_L = I_T \times X_L$

$= 5{,}189 \times 6{,}283$ ✓

$= 32{,}602\ V$ ✓ (2)

4.3.7 $\theta = \cos^{-1}\frac{R}{Z}$

$= \cos^{-1}\frac{20}{21{,}195}$ ✓

$= 19{,}333^\circ$ ✓ (2)

[20]

QUESTION 5

5.1 5.1.1 Using an instrument as an ammeter

$$I_{SH} = I_T - I_M \quad ✓$$

$$= 2 - 10 \times 10^{-3} \quad ✓$$

$$= 1{,}99 \text{ A} \quad ✓$$

Then

$$R_{SH} = \frac{I_M \times R_M}{I_{SH}}$$

$$= \frac{10 \times 10^{-3} \times 5}{1{,}99} \quad ✓$$

$$= 25 \times 10^{-3}\ \Omega \quad ✓ \qquad (5)$$

5.1.2 Using an instrument as a voltmeter

$$I_M = I_{SH}$$

$$R_S = \frac{V_T}{I_M} - R_M \quad ✓$$

$$= \frac{12}{10 \times 10^{-3}} - 5 \quad ✓$$

$$= 1{,}195\ \text{k}\Omega \quad ✓ \qquad (3)$$

5.2
- Electromagnetic damping
- Mechanical damping

(2)
[10]

QUESTION 6

6.1

- The anode terminal is heavily doped with P-type material, wherein trivalent impurity atoms are added to pure intrinsic semiconductor material.
- The cathode terminal is heavily doped with N-type material, wherein pentavalent impurity atoms are added to pure intrinsic semiconductor material. (2 x 2) (4)

6.2

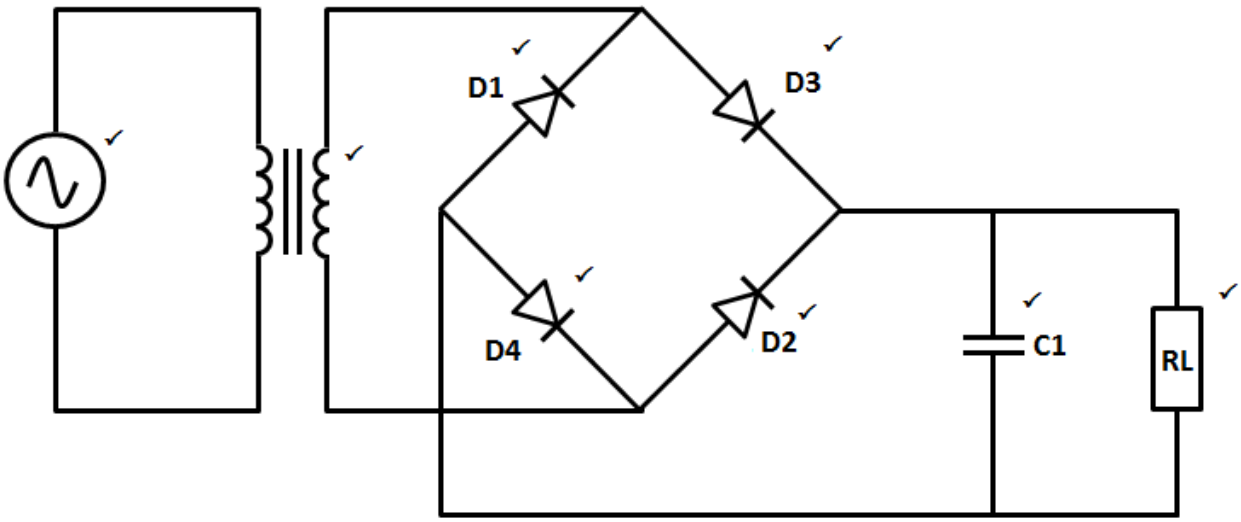

(one full mark per diode, half marks for the other components) (6)
[10]

QUESTION 7

7.1

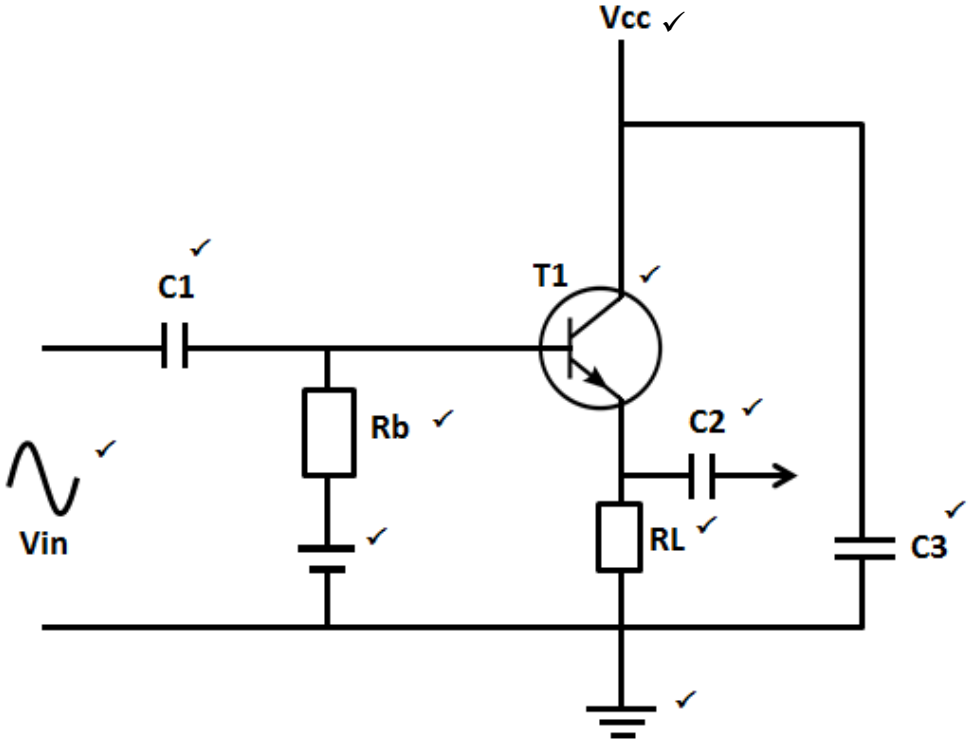

(Each tick = half a mark) (5)

7.2
- Collector current✓
- In terms of magnitude, the collector current of a common emitter transistor amplifier configuration is much larger in value than the corresponding base current, such that the base current is in the order of micro-amperes while the collector current is in the order of milliamperes.✓✓ (3)

7.3
- Class A
- Class B
- Class C (3)

[11]

QUESTION 8

8.1

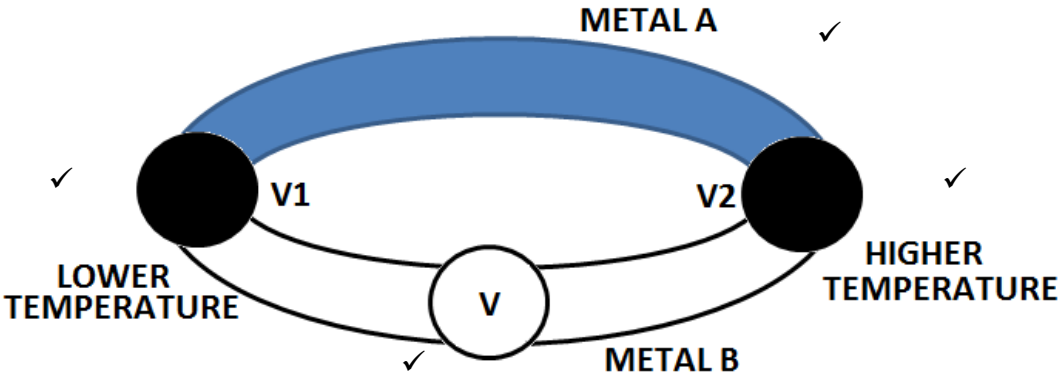

- When a temperature difference exists between the hot and cold junctions, a potential difference is produced (V2-V1) ✓ , causing a current flow✓
- When the meter is connected as shown, the meter reading will be proportional to the difference in temperature between the hot and cold junctions✓ (7)

8.2
- Positive temperature coefficient – The resistance of a material increases with an increase in temperature.

- Negative temperature coefficient – The resistance of a material decreases with an increase in temperature. (2 x 2) (4)

8.3
- The controlling shaft and the controlled shaft can be very far apart. ✓
- Contact between the systems can be through wires, radio or telemetering.✓
- A synchro system uses very little electrical energy compared to the energy used by a mechanical system. ✓ (3)

[14]

QUESTION 9

9.1 $$P_{IN} = \frac{V_{IN}^{\ 2}}{R_{IN}}$$

$$= \frac{(6,6)^2}{7,6}$$ ✓

$$= 5,732 \text{ W}$$ ✓

9.2 $$P_{OUT} = I_{OUT}^{\ 2} \times R_{OUT}$$

$$= (5,6)^2 \times 7,6$$ ✓

$$= 238,336 \text{ W}$$ ✓

9.3 $$N = 10\text{Log}\frac{P_{OUT}}{P_{IN}}$$

$$= 10\text{Log}\frac{238,336}{5,732}$$ ✓

$$= 16,189 \text{ dB}$$ ✓

(3 x 2) **[6]**

TOTAL: 100

Copyright reserved