

higher education & training

Department:
Higher Education and Training
REPUBLIC OF SOUTH AFRICA

MARKING GUIDELINE

NATIONAL CERTIFICATE

APRIL EXAMINATION

INDUSTRIAL ELECTRONICS N2

9 APRIL 2015

This marking guideline consists of 6 pages.

Copyright reserved

SECTION A

QUESTION 1

1.1 False
1.2 True
1.3 False
1.4 True
1.5 True
1.6 False
1.7 True
1.8 False
1.9 False
1.10 True

(10 × 1 **[10]**

TOTAL SECTION A: 10

SECTION B

QUESTION 2

2.1 2.1.1

$$R_{P1} = \frac{100 \times 80}{100 + 80} = 44{,}444\ \Omega \checkmark$$

$$R_{P2} = \frac{60 \times 400}{60 + 400} = 52{,}174\ \Omega \checkmark$$

$$R_T = R_{P1} + R_{20} + R_{P2} = 116{,}618\ \Omega \checkmark\checkmark$$

(4)

2.1.2

$$I_T = I_{20} = \frac{200}{116{,}618} = 1{,}715\ A \checkmark\checkmark$$

(2)

2.1.3

$$I_{100} = \frac{80}{180} \times 1{,}715 = 0{,}762\ A \checkmark\checkmark$$

(2)

2.1.4

$$I_{400} = \frac{60}{460} \times 1{,}715 = 0{,}224\ A \checkmark\checkmark$$

(2)

2.1.5

$$P_{20} = I^2 R = 1{,}715^2 \times 20 = 58{,}825\ W \checkmark\checkmark$$

(2)

2.2 2.2.1

$$I_1 = 3 - 2 = 1\ A \checkmark$$

(1)

2.2.2

$$I_2 + 2A = 2{,}5\ A \checkmark$$

$$I_2 = 2{,}5 - 2 = 0{,}5\ A \checkmark$$

(2)

Copyright reserved

2.2.3 $I_3 + I_2 = I_1$

$I_3 = I_1 - I_2$ ✓

$= 1 - 0,5$ ✓

$= 0,5\ A$ ✓ (3)

[18]

QUESTION 3

3.1 3.1.1 $X_L = 2\pi fL = 2\pi \times 50 \times 0,12 = 37,699\ \Omega$ ✓✓

$X_C = \dfrac{1}{2\pi fC} = \dfrac{1}{2\pi \times 50 \times 100 \times 10^{-6}} = 31,831\ \Omega$ ✓✓

$Z = \sqrt{R^2 + (X_L - X_L)^2} = \sqrt{12^2 + (37,699 - 31,831)^2} = 13,358\ \Omega$ ✓✓

$I_T = \dfrac{V}{Z} = \dfrac{210}{13,358} = 15,712\ A$ ✓✓ (8)

3.1.2 $\theta = \text{Cos}^{-1}\dfrac{R}{Z} = \text{Cos}^{-1}\dfrac{12}{13,358} = 26,060°$ ✓✓ (2)

3.1.3 $V_R = I \times R = 15,721 \times 12 = 188,652\ V$ ✓

$V_L = I \times X_L = 15,721 \times 37,699 = 592,666\ V$ ✓

$V_C = I \times X_C = 15,721 \times 13,831 = 500,415\ V$ ✓ (3)

3.1.4 $f_r = \dfrac{1}{2\pi\sqrt{LC}} = 45,944\ Hz$ ✓ (1)

3.2 $A_P = 10\log\dfrac{P_2}{P_1}$

$12dB = 10\log\dfrac{100 \times 10^{-3}}{P_1}$ ✓

$1,2 = \log\dfrac{100 \times 10^{-3}}{P_1}$ ✓

$15,849 = \dfrac{100 \times 10^{-3}}{P_1}$ ✓

$P_1 = 0,00\ 6W = 6\ mW$ ✓ (4)

[18]

NB: If there are two adjacent ticks, one will be for the preceding step.

Copyright reserved

QUESTION 4

4.1 4.1.1

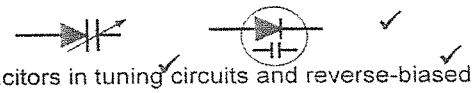

As capacitors in tuning✓ circuits and reverse-biased✓

4.1.2



(Any one of the three alternate symbols are accepted - one mark for symbol)
Regulators, voltage references✓ and reverse-biased✓

4.1.3

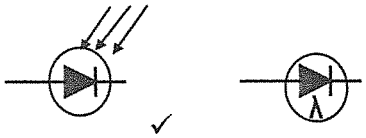

Switches, detectors✓ and reverse-biased✓

4.1.4

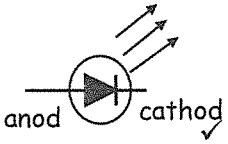

Displays, voltage isolators, remote controls✓, indicators and reverse-biased✓

(4 × 3) (12)

4.2 4.2.1 (a) less
(b) give up

4.2.2 (a) eight
(b) neither lose nor gain

4.2.3 (a) four
(b) share

(3 × 2) (6)
[18]

Copyright reserved

QUESTION 5

5.1 5.1.1

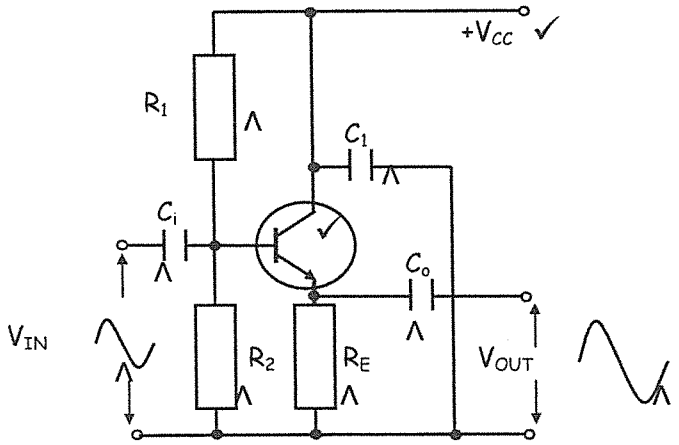

(6)

5.1.2 No phase difference or 0✓ (1)

5.1.3 Emitter follower✓ (1)

5.2 Resistive✓
Capacitive✓
Inductive✓
Photo-sensitive✓
Piezo-electric✓ (5)

5.3 5.3.1

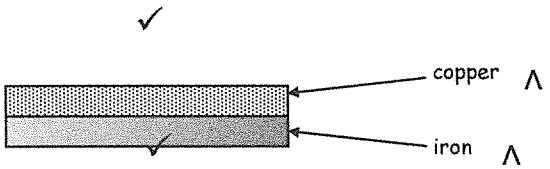

(2)

5.3.2 All metals expand if heated and contract if cooled. They expand or cool at different rates. The rate at which a metal expands or contracts is called its coefficient of expansion. ✓
Owing to the difference in the constants of expansion of the two materials, a flat strip will bend one way (toward the iron part) if heated, and in the opposite direction if cooled below its normal temperature. ✓✓ (3)

[18]

Copyright reserved

QUESTION 6

6.1 A measuring instrument is a device that can be used to determine the value or magnitude of an unknown quantity or variable. ✓✓ (2)

6.2 6.2.1 $$R_S = \frac{V}{I_m} - R_M = \frac{20}{10\times10^{-3}} - 5 = 1\,995\ \Omega$$ ✓✓✓ (3)

6.2.2 $$R_{SH} = \frac{I_M R_M}{I - I_M} = \frac{10\times10^{-3}\times5}{2-10\times10^{-3}} = 0{,}025\ \Omega$$ ✓✓✓✓

Two marks for preceding steps, 1 mark for answer, 1 for unit (4)

6.3 6.3.1 In parallel (1)

6.3.2 In series (1)

6.4

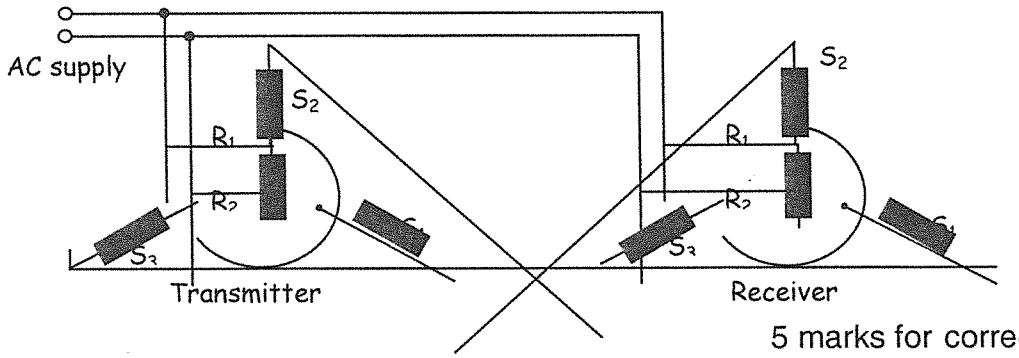

5 marks for correct connections
2 marks for sketch
(7)
[18]

TOTAL SECTION B: 90
GRAND TOTAL: 100

Copyright reserved